

Air bearing actuator
Single acting/push

LBC Series

RoHS CAD

Specifications

Item			LBC-01	LBC-05	LBC-30
Actuation			Single acting/push (*1)		
Working fluid			Clean compressed air (JIS B 8392-1: 2003 Grade 1.4.2 or equivalent)		
Working pressure MPa	Air bearing port		0.3 (≈44 psi, 3 bar) to 0.5 (≈73 psi, 5 bar)		
	Thrust port		0.002 (≈0.29 psi, 0.02 bar) to 0.1 (≈15 psi, 1 bar)		
Ambient temperature		°C	5 (41°F) to 35 (95°F)		
Proof pressure		MPa	0.75 (≈110 psi, 7.5 bar)		
Pressurized area		mm^2	10	50	314
Thrust range		N	0.02 to 1.0	0.1 to 5.0	0.6 to 31.4
Stroke length		mm	5^{+1}_{0}		30^{+1}_{0}
Allowable lateral load		N	1.2	0.8	4.0
Weight		g	50	45	345
Movable part weight (*2)		g	5	4.5	65
Bearing part air consumption (*3)		ℓ/min	2.5 or less	2.5 or less	7.5 or less

*1 : Rod return mechanism is not available.
*2 : Movable part weight indicates the total weight of rod, stopper and cross headed flat head screw.
*3 : Value when bearing pressure is 0.5 MPa

Thrust characteristics

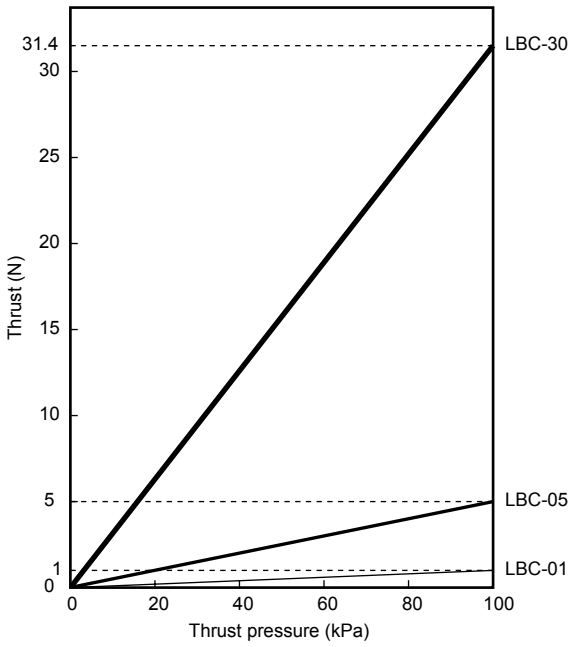

How to order

LBC - 01

Ⓐ Thrust

Code	Description
Ⓐ Thrust	
01	1N
05	5N
30	30N

Dimensions

● LBC-01

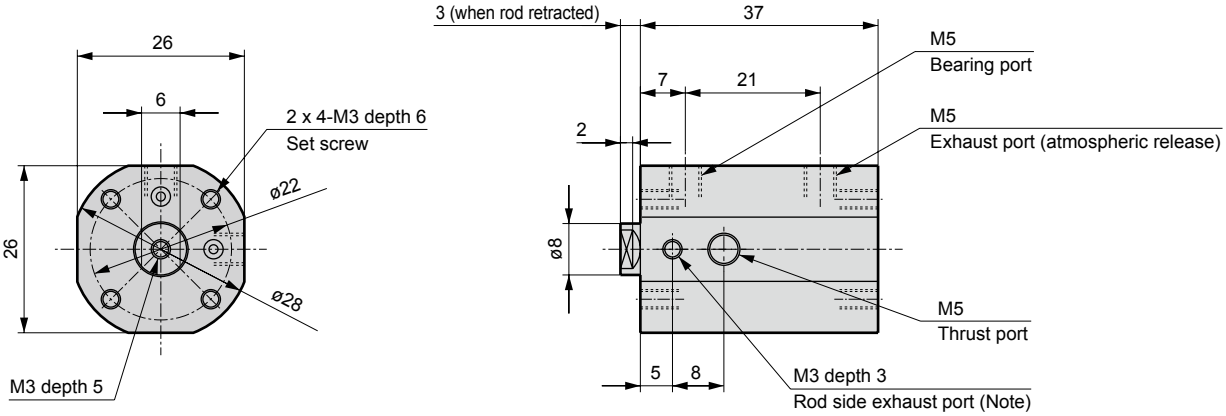

● LBC-05

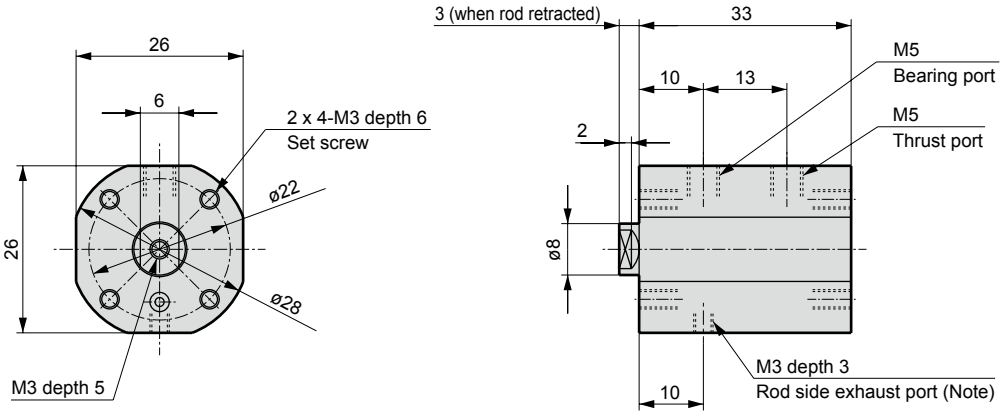

● LBC-30

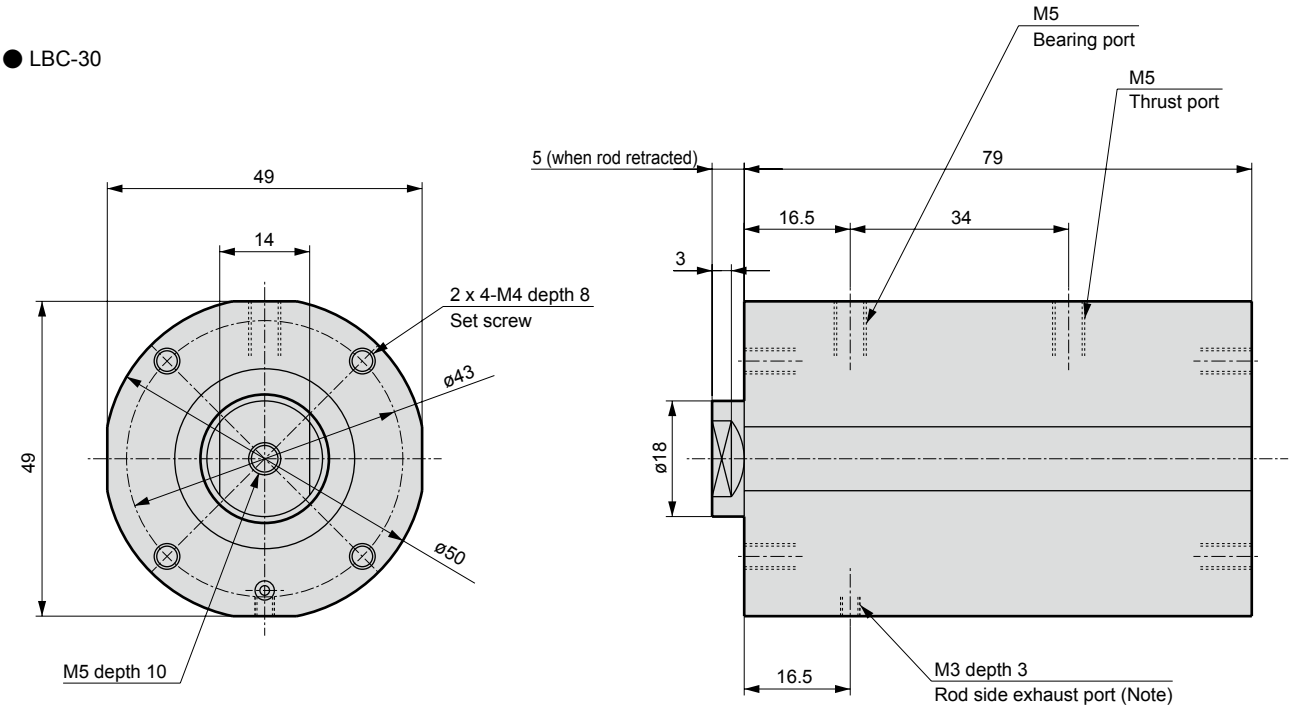

(Note) To prevent air leaks from the rod section, evacuate air from the rod side exhaust port using a vacuum generator.

Internal structure and parts list

● LBC-01

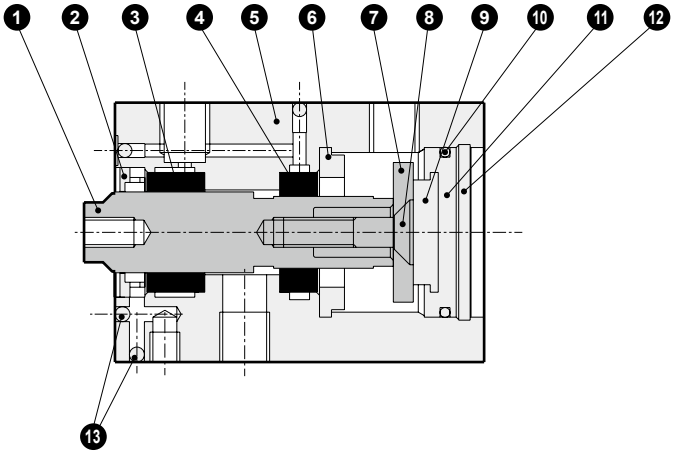

● LBC-05, 30

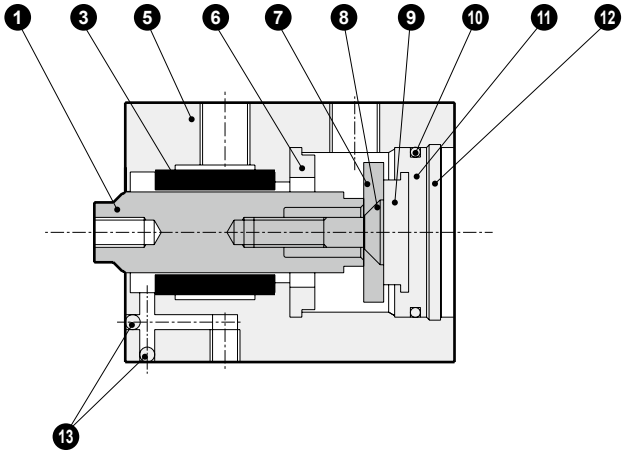

Cannot be disassembled

No.	Part name	Material	Remarks	No.	Part name	Material	Remarks
1	Rod	Aluminum alloy		8	Cross headed flat head screw	Stainless steel	
2	Cap	Aluminum alloy	Alumite	9	Cushion rubber R	Urethane rubber	
3	Bush 1	Carbon graphite porous material		10	Gasket	Nitrile rubber	
4	Bush 2	Carbon graphite porous material		11	Base plate	Special aluminum	Chromate
5	Body	Aluminum alloy	Alumite	12	Snap ring for hole	Stainless steel	
6	Cushion rubber L	Urethane rubber		13	Steel ball	Stainless steel	
7	Stopper	Aluminum alloy	Alumite				

Circuits used

When air is evacuating from the rod side exhaust port

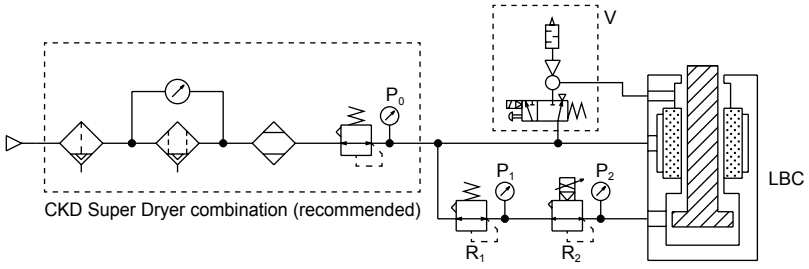

P_0: Air bearing port supply pressure (0.3 to 0.5 MPa)
P_1: Electro pneumatic regulator supply pressure (0.2 MPa)
P_2: Thrust port supply pressure (0.002 to 0.1 MPa)
R_1: Regulator
R_2: Electro pneumatic regulator for LBC
EV25**-FL (Refer to pages 1001 to 1003 for details.)
Details of customization
- Control pressure 0 to 0.1 MPa (Control pressure accuracy is improved)
- Fixed orifice (Pressure relief performance for low pressure range is improved)
- Normally open (NO)
(Prevents the rod from popping out when the power supply is turned OFF)

V : SELVACS (VSK)
(Only when necessary to prevent air leak from the rod section)



Electro pneumatic regulator for LBC (made to order)

EV2500 Series

- Electro pneumatic regulator for air bearing actuator LBC
- Pressure control range: 0 to 0.1 MPa
- Actuation: NO

JIS symbol



RoHS

Specifications

Item		EV2500-□08-FL			
Working fluid		Clean compressed air (JIS B 8392-1: 2012 Grade 1.3.2)			
Working pressure range		0.2 (≈29 psi, 2 bar) to 0.3 MPa (≈44 psi, 3 bar)			
Proof pressure		0.7 MPa (≈100 psi, 7 bar)			
Pressure control range		0 (≈0 psi, 0 bar) to 0.1 MPa (≈15 psi, 1 bar)			
Power supply voltage		24 VDC ± 10% (stabilized power supply with ripple rate 1% or less)			
Current consumption		0.1 A or less (0.6 A rush current when power is ON)			
Input signal (input impedance)		0 to 10 VDC (20 kΩ)	0 to 5 VDC (10 kΩ)	4 to 20 mADC or 1 to 5 VDC (250 Ω) *1	10 kΩ variable resistance or 0-10 VDC (20 kΩ)
Monitor output		1 to 1.8 VDC (none for 10 kΩ variable resistance input)			
Insulation resistance		100 MΩ (500 VDC) or more			
Withstand voltage		1500 VAC 1 min.			
Accuracy	Hysteresis	1% F.S. or less			
	Linearity	±0.5% F.S. or less			
	Resolution	0.5% F.S. or less			
*2	Repeatability	0.5% F.S. or less			
Temperature characteristics	Zero point fluctuation	0.75% F.S./°C or less			
	Span fluctuation	0.35% F.S./°C or less			
Step response *3		0.6 s or less			
Vibration resistance		98 m/s^2 or less (JISC60068-2-6)			
Operating ambient temperature range		5 to 50°C			
Mounting orientation		Free			
Port size		Rc1/4			
Weight		330 g			

*1 : When used with a signal voltage of 1 to 5 VDC, 4 to 20 mA of current flows into the EV interior from the signal source. Confirm specifications of the signal source before use.
*2 : The above characteristics are for FS 10 to 100% control pressure with a power supply voltage 24.0 VDC and a working pressure 0.3 MPa.
*3 : Working pressure: Max. working pressure and step feed: 50% F.S. → 100% F.S. 50%F.S. → 60%F.S. 50%F.S. → 40%F.S.

How to order

EV2500 - 0 08 - C11 B - FL298410

- Ⓐ Input signal
- Ⓑ Port size
- Ⓒ Other options (Cable option)
- Ⓒ Other options (Bracket option)
- Ⓓ (Identification number)

Code	Description
Ⓐ Input signal	
0	0 to 10 VDC
1	0 to 5 VDC
2	4 to 20 mADC or 1 to 5 VDC
3	10 kΩ variable resistance or 0-10 VDC (connected to 10 VDC built-in power supply)
Ⓑ Port size	
08	Rc1/4
Ⓒ Other options	
Cable option	
Blank	None
C11	1 m attached
C13	3 m attached
Bracket option	
Blank	None
B	C type bracket attached
B4	B type bracket attached
Ⓓ (Identification number)	
FL298410	For LBC-01
FL298411	For LBC-05
FL298412	For LBC-30

Dimensions

● EV2500-FL******

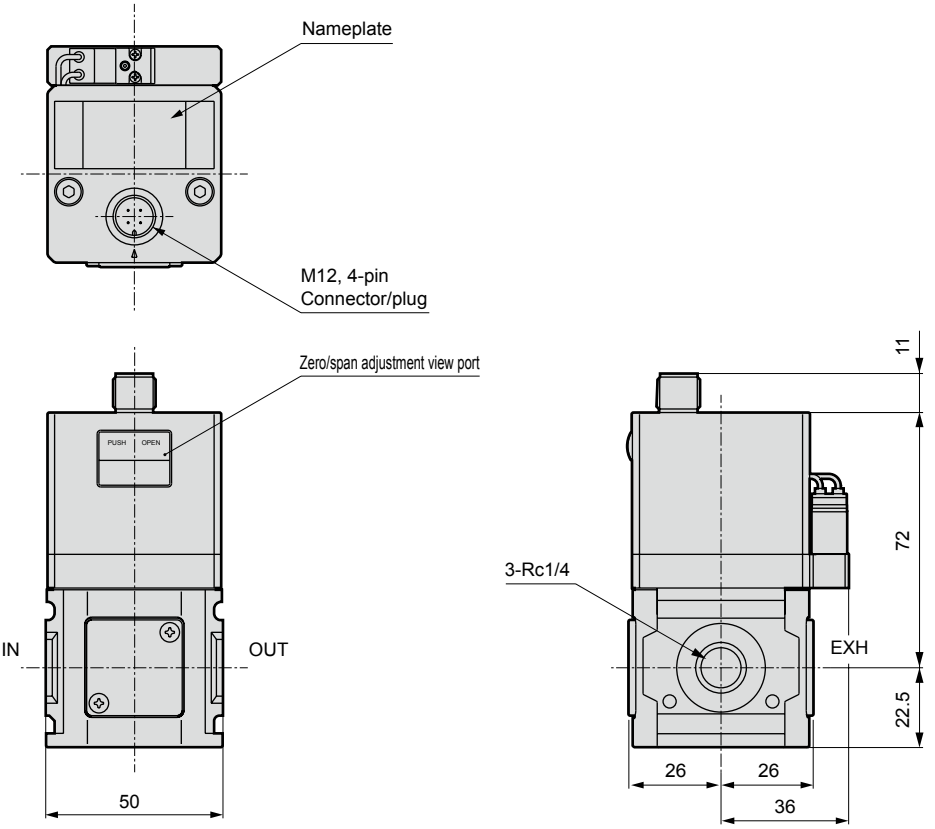

● Bracket option

B type bracket (-B4): floor mounted

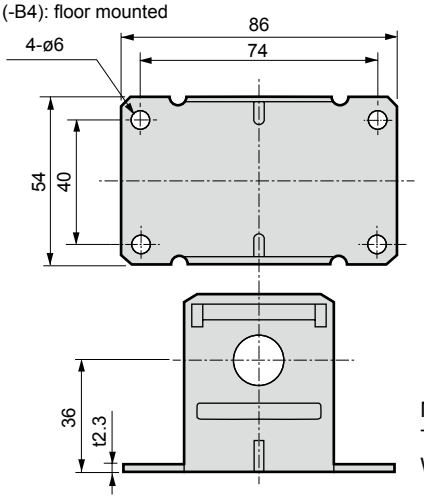

Material : SPCC
Treatment: Zinc plated
Weight : 165g

C type bracket (-B): wall mounted

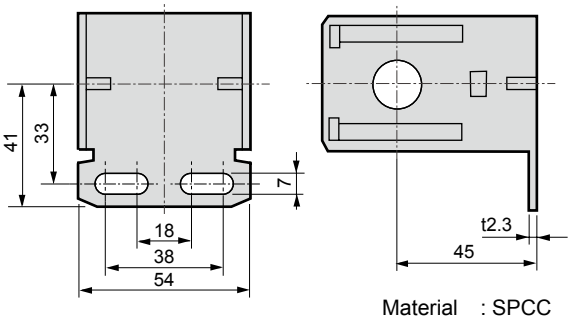

Material : SPCC
Treatment: Zinc plated
Weight : 148 g

● Cable option

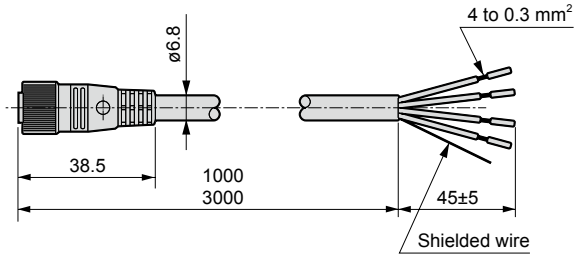

-C1* Shield/cable/connector

Pin No.	Insulator color	Applications	Type of input signal			
			0 to 10 V	0 to 5 V	4 to 20 mA 1 to 5 V	10 kΩVR (0 to 10 V)
1	Red	Power supply ⊕	24 V			
2	Green	——	Monitor output 1 to 1.8 V			VR input terminal
3	Black	Common	0 V			VR input terminal 0 V
4	White	Input signal	0 to 10 V	0 to 5 V	4 to 20 mA 1 to 5 V	VR output terminal (0 to 10 V)

If a cable connector is not used, the following recommended cable sockets (L type) can be used. Use a shielded wire cable.

Screw fixing	ELWIKA4012	Correns (Hirschmann)
Soldered	XS2C-D422	OMRON Corporation