

Rotary clamp cylinder/single guide double acting/single rod

RCS2 Series

● Bore size: ø12/ø16/ø20/ø25/ø32/ø40/ø50/ø63

● Double acting

JIS symbol 

RoHS

Specifications

1 MPa ≈ 145.0 psi, 1 MPa = 10 bar

Item			RCS2							
Bore size		mm	ø12	ø16	ø20	ø25	ø32	ø40	ø50	ø63
Actuation			Double acting							
Working fluid			Compressed air							
Max. working pressure		MPa	1.0 (≈145 psi, 10 bar)							0.6 (≈87 psi, 6 bar)
Min. working pressure		MPa	0.1 (≈15 psi, 1 bar) (*1)							
Proof pressure		MPa	1.6 (≈232 psi, 16 bar)							
Ambient temperature		°C	-10 (14°F) to 60 (140°F) (no freezing)							
Port size		Rc, NPT, G	M5				1/8		1/4	
Stroke tolerance		mm	+1.0 0		+1.2 0					
Working piston speed		mm/s	50 to 200							
Cushion			Rod side: rubber cushioned, Head side: no cushioning							
Lubrication			Not required (use turbine oil class 1 ISO VG32 if necessary for lubrication)							
Turning ratio			90° ±10°							
Rotation direction			Right/Left							
Non-rotating accuracy (clamping, default value)			±1.4°		±1.2°			±0.9°		±0.7°
Pressurized area	mm²	Pull side	84	150	201	377	603	1056	1649	2803
		Push side	113	201	314	490	804	1256	1963	3117

*1: With constant pressurization

Stroke

Bore size (mm)	Stroke (mm)	Rotary stroke *1 (mm)	Clamp stroke *2 (mm)
ø12, ø16	17.5, 27.5, 37.5	7.5	10, 20, 30
ø20, ø25	19.5, 29.5, 39.5	9.5	10, 20, 30
ø32, ø40	25, 35, 45, 65	15	10, 20, 30, 50
ø50, ø63	29, 39, 49, 69	19	10, 20, 30, 50

*1: The rotary stroke is the dimension of forward action when rotating from the unclamp end in the clamping direction.
*2: The clamp stroke is the dimension of forward action in the clamping direction after rotation.

Rotating angle/rotation direction/non-rotating accuracy

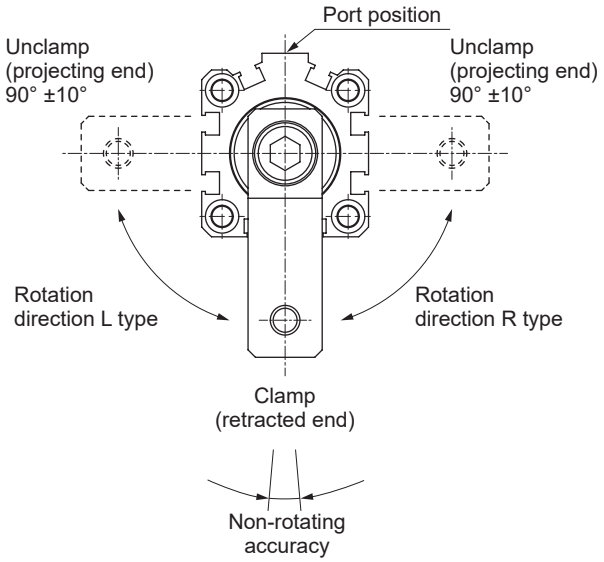

Switch specifications (T-switch)

● 1-color/2-color LED/for AC magnetic field

Item	Proximity 2-wire	Proximity 2-wire			Proximity 3-wire				Reed 2-wire							Proximity 2-wire
	T1H/T1V	T2H/T2V	T2YH/T2YV	T2WH/T2WV	T3H/T3V	T3PH/T3PV	T3YH/T3YV	T3WH/T3WV	T0H/T0V		T5H/T5V		T8H/T8V			T2YD (*2) T2YDT
Applications	Programmable controller For relay, compact solenoid valve	Dedicated for programmable controller			Programmable controller, For relay				Programmable controller, For relay		Programmable controller, relay/IC circuit (no indicator lamp), for serial connection		For programmable controller, relay			Dedicated for programmable controller
Output method	-				NPN output	PNP output	NPN output	NPN output	-							
Power supply voltage	-				10 to 28 VDC				-							
Load voltage	85 to 265 VAC	10 to 30 VDC		24 VDC ±10%	30 VDC or less				12/24 VDC	100/110 VAC	5/12/24 VDC	100/110 VAC	12/24 VDC	110 VAC	220 VAC	24 VDC ±10%
Load current	5 to 100mA	5 to 20mA(*1)			100 mA or less		50 mA or less		5 to 50mA	7 to 20mA	50 mA or less	20 mA or less	5 to 50mA	7 to 20mA	7 to 10mA	5 to 20 mA (*1)
Indicator lamp	LED (Lit when ON)	LED (Lit when ON)	Red/green LED (Lit when ON)	Red/green LED (Lit when ON)	LED (Lit when ON)	Yellow LED (Lit when ON)	Red/green LED (Lit when ON)	Red/green LED (Lit when ON)	LED (Lit when ON)		No indicator lamp		LED (Lit when ON)			Red/green LED (Lit when ON)
Leakage current	1 mA or less with 100 VAC, 2 mA or less with 200 VAC	1 mA or less			10 μA or less				0mA							1 mA or less
Weight g	1 m: 33 3 m: 87 5 m: 142	1 m: 18 3 m: 49 5 m: 80	1 m: 33 3 m: 87 5 m: 142	1 m: 18 3 m: 49 5 m: 80	1 m: 18 3 m: 49 5 m: 80		1 m: 33 3 m: 87 5 m: 142	1 m: 18 3 m: 49 5 m: 80	1 m: 18 3 m: 49 5 m: 80				1 m: 33 3 m: 87 5 m: 142			1 m: 61 3 m: 166 5 m: 272

*1: The above max. load current is 20 mA at 25°C. The current is lower than 20 mA if the operating ambient temperature around the switch is higher than 25˚C. (5 to 10 mA at 60°C)
*2: Switch for AC magnetic field (T2YD/T2YDT) cannot be used in DC magnetic field.

Switch specifications (F-switch)

● 1-color/2Color display

Item	Proximity **2**-wire	Proximity **3**-wire	Proximity **2**-wire		Proximity **3**-wire		
	F2S	F3S	F2H/F2V	F2YH/F2YV	F3H/F3V	F3PH/F3PV (Made to order)	F3YH/F3YV
Applications	Programmable controller Dedicated	Programmable controller,For relay	Programmable controller Dedicated		For programmable controller, relay		
Output method	-	NPN output	-		NPN output	PNP output	NPN output
Power supply voltage	-	10 to 28 VDC	-		10 to 28 VDC	4.5 to 28 VDC	10 to 28 VDC
Load voltage	10 to 30 VDC	30 VDC or less	10 to 30 VDC	24 VDC ±10%	30 VDC or less		
Load current	5 to 20mA	50 mA or less	5 to 20mA		100 mA or less	50 mA or less	
Indicator lamp	LED (Lit when ON)		Yellow LED (Lit when ON)	Red/green LED (Lit when ON)	Yellow LED (Lit when ON)		Red/green LED (Lit when ON)
Leakage current	1 mA or less	10 μA or less	1 mA or less		10 μA or less		
Weight g	1 m: 10 3 m: 29						

*1: The F-switch uses a bend-resistant lead wire.

Cylinder weight

(Unit: g)

Bore size (mm)	Stroke (mm)														Rod side flange(FA)	Head side flange(FB)	Switch weight
	17.5	19.5	25	29	27.5	29.5	35	39	37.5	39.5	45	49	65	69			
ø12	69				84				99						49	49	Refer to the weight in the switch specifications above.
ø16	100				123				146						59	59	
ø20		212				252				292					114	114	
ø25		267				314				361					125	125	
ø32			333				372				411		489		145	145	
ø40			554				629				704		854		193	193	
ø50				997				1118				1239		1481	335	335	
ø63				1373				1526				1679		1985	464	464	

Theoretical thrust table

(Unit: N)

Bore size (mm)	Operating direction	Working pressure MPa									
		0.1	0.2	0.3	0.4	0.5	0.6	0.7	0.8	0.9	1.0
ø12	Push	11.3	22.6	33.9	45.2	56.5	67.9	79.2	90.5	1.02×10^2	1.13×10^2
	Pull	8.5	17.0	25.4	33.9	42.4	50.9	59.4	67.9	76.3	84.8
ø16	Push	20.1	40.2	60.3	80.4	1.01×10^2	1.21×10^2	1.41×10^2	1.61×10^2	1.81×10^2	2.01×10^2
	Pull	15.1	30.2	45.2	60.3	75.4	90.5	1.06×10^2	1.21×10^2	1.36×10^2	1.51×10^2
ø20	Push	31.4	62.8	94.2	1.26×10^2	1.57×10^2	1.88×10^2	2.20×10^2	2.51×10^2	2.83×10^2	3.14×10^2
	Pull	20.1	40.2	60.3	80.4	1.01×10^2	1.21×10^2	1.41×10^2	1.61×10^2	1.81×10^2	2.01×10^2
ø25	Push	49.1	98.2	1.47×10^2	1.96×10^2	2.45×10^2	2.95×10^2	3.44×10^2	3.93×10^2	4.42×10^2	4.91×10^2
	Pull	37.8	75.6	1.13×10^2	1.51×10^2	1.89×10^2	2.27×10^2	2.64×10^2	3.02×10^2	3.40×10^2	3.78×10^2
ø32	Push	80.4	1.61×10^2	2.41×10^2	3.22×10^2	4.02×10^2	4.83×10^2	5.63×10^2	6.43×10^2	7.24×10^2	8.04×10^2
	Pull	60.3	1.21×10^2	1.81×10^2	2.41×10^2	3.02×10^2	3.62×10^2	4.22×10^2	4.83×10^2	5.43×10^2	6.03×10^2
ø40	Push	1.26×10^2	2.51×10^2	3.77×10^2	5.03×10^2	6.28×10^2	7.54×10^2	8.80×10^2	1.01×10^3	1.13×10^3	1.26×10^3
	Pull	1.06×10^2	2.11×10^2	3.17×10^2	4.22×10^2	5.28×10^2	6.33×10^2	7.39×10^2	8.44×10^2	9.50×10^2	1.06×10^3
ø50	Push	1.96×10^2	3.93×10^2	5.89×10^2	7.85×10^2	9.82×10^2	1.18×10^3	1.37×10^3	1.57×10^3	1.77×10^3	1.96×10^3
	Pull	1.65×10^2	3.30×10^2	4.95×10^2	6.60×10^2	8.25×10^2	9.90×10^2	1.15×10^3	1.32×10^3	1.48×10^3	1.65×10^3
ø63	Push	3.12×10^2	6.23×10^2	9.35×10^2	1.25×10^3	1.56×10^3	1.87×10^3	-	-	-	-
	Pull	2.80×10^2	5.61×10^2	8.41×10^2	1.12×10^3	1.40×10^3	1.68×10^3	-	-	-	-

How to order

Without switch (built-in magnet for switch)

RCS2 - 00 - 12 ◯ - 17.5 - R ——— H A

With switch (built-in magnet for switch)

RCS2 - 00 - 12 ◯ - 17.5 - R - T0H - D - H A

Ⓐ Mounting
Ⓑ Bore size
Ⓒ Port thread
Ⓓ Stroke
Ⓔ Rotation direction
Ⓕ Switch model No.
Ⓖ Switch quantity
Ⓗ Option *1
Ⓘ Accessory

Code	Description
Ⓐ Mounting	
00	Basic
FA	Rod side flange
FB	Head side flange

Ⓑ Bore size (mm)	
12	ø12
16	ø16
20	ø20
25	ø25
32	ø32
40	ø40
50	ø50
63	ø63

Ⓒ Port thread	
Blank	Rc thread (M5 for ø25 and less)
N	NPT thread (ø32 and over)
G	G thread (ø32 and over)

Ⓓ Stroke (mm)
Refer to the stroke table on the following page.

Ⓔ Rotation direction	See the following page for details.
R	Rotates 90° in CW direction when retracted
L	Rotates 90° in CCW direction when retracted

Ⓕ Switch model No.

Straight Lead wire	L-shaped Lead wire	Contact	Voltage AC	Voltage DC	Indicator	Lead wire	Bore size 12	16	20	25	32	40	50	63
T0H*	T0V*	Reed	●	●	1-color LED	2-wire	●	●	●	●	●	●	●	●
T5H*	T5V*	Reed	●	●	No indicator lamp	2-wire	●	●	●	●	●	●	●	●
T8H*	T8V*	Reed	●	●	1-color LED	2-wire			●	●	●	●	●	●
T1H*	T1V*	Proximity	●		1-color LED	2-wire			●	●	●	●	●	●
T2H*	T2V*	Proximity		●	1-color LED	2-wire	●	●	●	●	●	●	●	●
T3H*	T3V*	Proximity		●	1-color LED	3-wire	●	●	●	●	●	●	●	●
T3PH*	T3PV*	Proximity		●	1-color LED (PNP output)	3-wire	●	●	●	●	●	●	●	●
T2WH*	T2WV*	Proximity		●	2-color LED	2-wire	●	●	●	●	●	●	●	●
T2YH*	T2YV*	Proximity		●	2-color LED	2-wire			●	●	●	●	●	●
T3WH*	T3WV*	Proximity		●	2-color LED	3-wire	●	●	●	●	●	●	●	●
T3YH*	T3YV*	Proximity		●	2-color LED	3-wire			●	●	●	●	●	●
T2YD*	-	Proximity		●	2-color LED AC magnetic field	2-wire			●	●	●	●	●	●
T2YDT*	-	Proximity		●	2-color LED AC magnetic field	2-wire			●	●	●	●	●	●
T2JH*	T2JV*	Proximity		●	1-color LED off-delay	2-wire			●	●	●	●	●	●
F2S*		Proximity		●	1-color LED	2-wire			●	●				
F3S*		Proximity		●	1-color LED	3-wire			●	●				
F2H*	F2V*	Proximity		●	1-color LED	2-wire			●	●				
F3H*	F3V*	Proximity		●	1-color LED	3-wire			●	●				
F3PH*	F3PV*	Proximity		●	1-color LED (PNP output) (made to order)	3-wire			●	●				
F2YH*	F2YV*	Proximity		●	2-color LED	2-wire			●	●				
F3YH*	F3YV*	Proximity		●	2-color LED	3-wire			●	●				

*** Lead wire length**	
Blank	1 m (standard)
3	3 m (option)
5	5 m (option) *2

Ⓖ Switch quantity	
R	1 on rod side
H	1 on head side
D	With both sides

Ⓗ Option	
Blank	No option
H	Spigot at head side

Ⓘ Accessory (included at shipment)	
Blank	No accessories
A	Clamp lever

Precautions for model No. selection

*1: For Ⓐ Mounting format "FA" or "FB", Ⓗ Option "H" cannot be selected.
*2: F-switch cannot be selected.

[Example of model No.]

RCS2-00-12-17.5-R-T0H-D-HA

Model: Rotary clamp cylinder/double acting

Ⓐ Mounting : Basic
Ⓑ Bore size : ø12 mm
Ⓒ Port thread : M5
Ⓓ Stroke : 17.5 mm
Ⓔ Rotation direction : Rotates 90° in CW direction when retracted
Ⓕ Switch model No. : Reed T0H switch, lead wire 1 m
Ⓖ Switch quantity : With both sides
Ⓗ Option : Spigot at head side
Ⓘ Accessory : Clamp lever

[Stroke table]

Stroke	Bore size								Rotation stroke	Clamp stroke
	12	16	20	25	32	40	50	63		
17.5	●	●							7.5	10
19.5			●	●					9.5	10
25					●	●			15	10
29							●	●	19	10
27.5	●	●							7.5	20
29.5			●	●					9.5	20
35					●	●			15	20
39							●	●	19	20
37.5	●	●							7.5	30
39.5			●	●					9.5	30
45					●	●			15	30
49							●	●	19	30
65					●	●			15	50
69							●	●	19	50

[Rotation direction]

R	Rotates 90° in CW direction when retracted	L	Rotates 90° in CCW direction when retracted

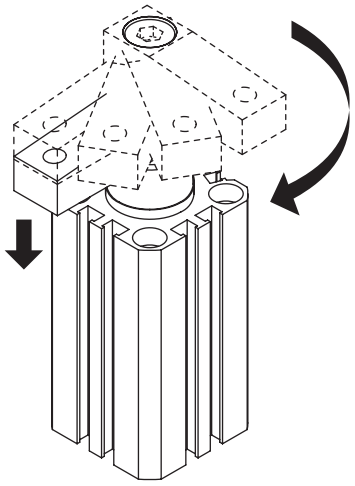

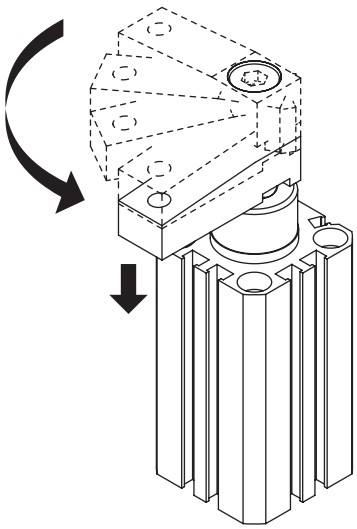

Discrete switch model No.

SW - T0H3

Switch model No.
(Item Ⓕ on page 1070)

Flange kit model No.

RCS2 - FA - 12

Bore size
(Item Ⓑ on page 1070)

Clamp lever kit model No.

RCS2 - A - 12

Code	Applicable bore size
12	ø12
16	ø16
20	ø20, ø25
32	ø32, ø40
50	ø50, ø63