

Fine Speed Rotary Axis type

SFR Series

Fine Speed Rotary Table type

SFRT Series

● Size: 3, 10, 20

JIS symbol



RoHS

Specifications

Item			SFR-3	SFR-10	SFR-20	SFRT-3	SFRT-10	SFRT-20
Size			3	10	20	3	10	20
Effective torque Note 1	90°		0.47	1.44	2.71	0.47	1.44	2.71
N•m	180°		0.35	1.08	2.03	0.35	1.08	2.03
Working fluid			Compressed air					
Actuation	90°		Vane type					
	180°		Vane and pinion gear type					
Max. working pressure		MPa	0.7					
Min. working pressure		MPa	0.1					
Proof pressure		MPa	1.05					
Ambient temperature		°C	0 to 60 (there should be no freezing)					
Port size			M5					
Permission absorbed energy		mJ	0.8	1.7	3.5	1.3	6.3	9.6
Lubrication			Unnecessary (use ISOVG32 turbine oil for lubrication)					
Internal volume		cm^3	3.7	9.1	19.4	3.7	9.1	19.4
Weight	90°	g	70	120	250	200	350	560
	180°	g	120	220	430	230	430	690
Allowable radial load	Note 2	N	40	50	300	40	50	60
Allowable thrust load	Note 2	N	13	16	20	30	60	80
Allowable moment		N•m	–			0.7	0.9	2.9
Oscillating angle adjustment range	90°		–			90°±5°		
	180°		–			180°±5°		
Oscillating time adjustment range		sec/90°	0.07 to 1.5					
Table deflection accuracy		mm	–			0.03		
Backlash (SFR-180 type only)		Note 3	1.5° or less	2.5° or less	2.5° or less	–	–	–

Note 1: The effective torque is for when the working pressure is 0.5 MPa.
Note 2: The SFR allowable radial load and allowable thrust load values are not dynamic load values.
Note 3: The backlash values are reference values.
* The SFR-□-180 shaft type oscillating angle is 190°.

Switch Specifications

Item	Contactless 2-wire type	Contactless 3-wire type
	F2S	F3S
Application	For programmable controller only	For programmable controller, relays
Output method	–	NPN output
Power supply voltage	–	10 to 28 VDC
Load voltage	10 to 30 VDC	30 VDC or less
Load current	5 to 20mA	50mA or less
Indicator lamp	Illuminates when LED ON	
Leakage current	1mA or less	10μA or less

Note 1: The above maximum load current value of 20mA is at 25°C. The current will be lower than 20mA if ambient temperature around the switch is higher than 25 °C. (5 to 10mA at 60 °C)

How to Order

●Without switch

SFR - 10 - 90

●With switch

SFRT - 20 - 180 - F2S - D

Ⓐ Model No.
Ⓑ Size
Ⓒ Oscillating angle
Ⓓ Switch model No.
Ⓔ Number of switches

Code	Descriptions
Ⓐ Model No.	
SFR	Shaft type
SFRT	Table type

Ⓑ Size	
Size	**Effective torque (when 0.5MPa)**
3	0.3 [N·m]
10	1.0 [N·m]
20	2.0 [N·m]

Ⓒ Oscillating angle	
90	90°
180	180°

Ⓓ Switch model No.			
Model	**Contacts**	**Display**	**Lead wires**
F2S *	Contactless	Single-color display	2 wires
F3S *			3 wires

*** Lead wire length**	
Blank	1 m (standard)
3	3 m (option)

Ⓔ Number of switches	
R	1 right rotation detection switch
L	1 left rotation detection switch
D	2

[Model No. indication example]

SFRT-20-180-F2S-D

Ⓐ Model : Table type SFRT
Ⓑ Size : 2.0 N·m
Ⓒ Oscillating angle : 180°
Ⓓ Switch model No. : F2S
Ⓔ Number of switches : 2

●Switch unit model No. indication method

SFR - F2S - D - 3

Ⓐ Switch model No.
Ⓑ Number of switches
Ⓒ Size

Code	Descriptions
Ⓐ Switch model No.	
Model	**Contacts** / **Display** / **Lead wires**
F2S *	Contactless / Single-color display / **2 wires**
F3S *	/ / **3 wires**

*** Lead wire length**	
Blank	1 m (standard)
3	3 m (option)

Ⓑ Number of switches	
S	1
D	2

Ⓒ Size	
3	Effective torque 0.3 [N·m] type
10	Effective torque 1.0 [N·m] type
20	Effective torque 2.0 [N·m] type

[Model No. indication example]

SFR-F2S-D-3

Ⓐ Switch model No. : F2S
Ⓑ Number of switches : 2
Ⓒ Size : Effective torque 0.3 [N·m] type

Switch Operating Range

Item	F2S, F3S	
Model No.	Operating range	Differential
SFR, SFRT	10 to 20°	5° or less

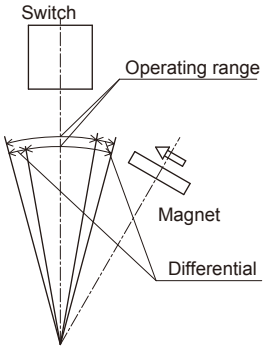

Switch Part Configuration

· With 1 switch

Part No.	Part name	Qty	
(1)	Switch unit mounting plate	1	Note 1
(2)	Mounting bolt	4	
(3)	Magnet holder	1	Note 1
(4)	Magnet holder set screw	1	
(5)	Magnet	1	
(6)	Switch unit	1	
(7)	Mounting bolt	2	
(8)	Switch holder 1	1	
(9)	Switch holder 2	–	
(10)	Plain washer	1	
(11)	Switch holder securing bolt	1	
(12)	Type F switch	1	
(13)	Spacer	1	Note 2
(14)	Securing nut	1	
(15)	Switch mounting screw	1	

· With 2 switch

Part No.	Part name	Qty	
(1)	Switch unit mounting plate	1	Note 1
(2)	Mounting bolt	4	
(3)	Magnet holder	1	Note 1
(4)	Magnet holder set screw	1	
(5)	Magnet	1	
(6)	Switch unit	1	
(7)	Mounting bolt	2	
(8)	Switch holder 1	1	
(9)	Switch holder 2	1	
(10)	Plain washer	1	
(11)	Switch holder securing bolt	1	
(12)	Type F switch	2	
(13)	Spacer	–	Note 2
(14)	Securing nut	2	
(15)	Switch mounting screw	2	

Note 1 : The switch unit mounting plates and magnet holders differ based on the size. Other parts are the same for all sizes.

Note 2 : On units with 1 switch, units are mounted with the (10) plain washer and (13) spacer inserted between the (8) switch holder and (11) switch holder securing bolt. (See drawing on right)

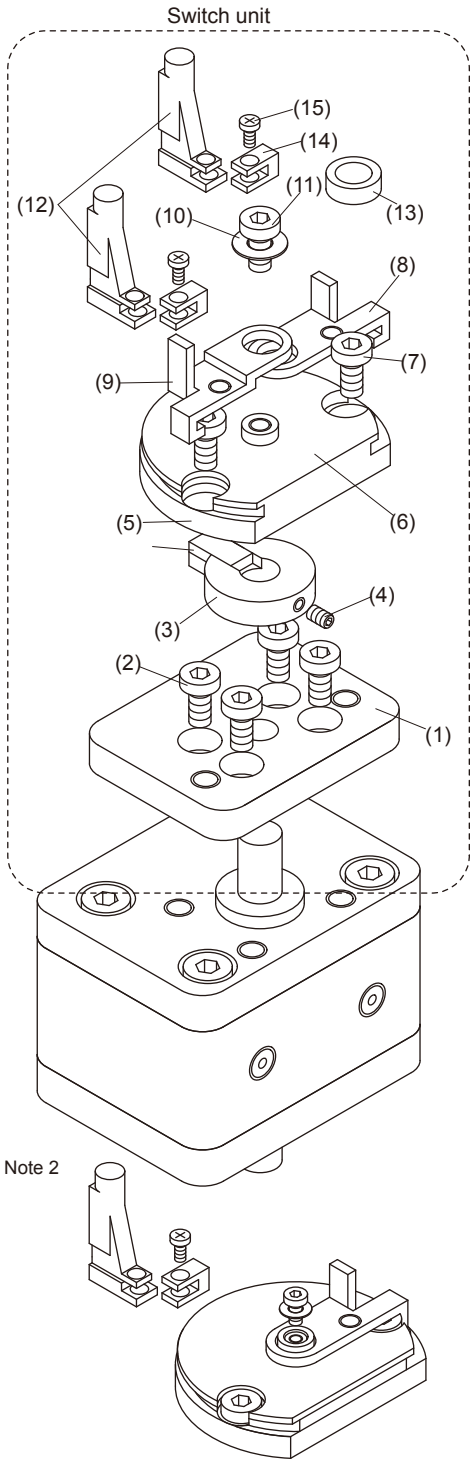

Oscillating Origin and Oscillating Direction

●SFR-□-90

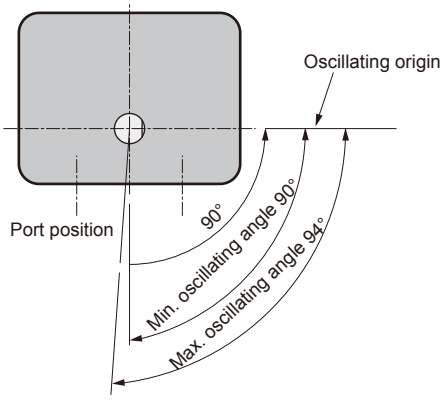

●SFR-□-180

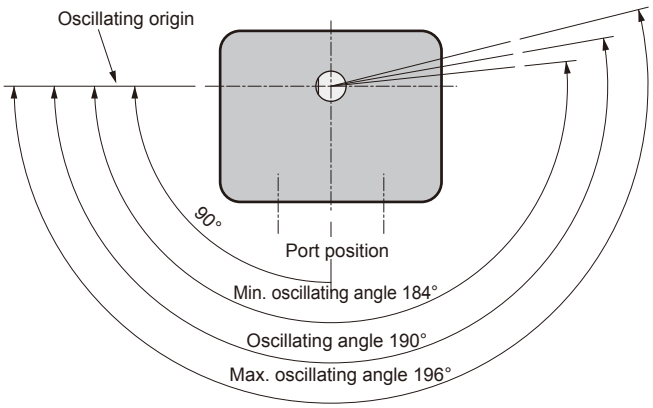

●SFRT-□-90

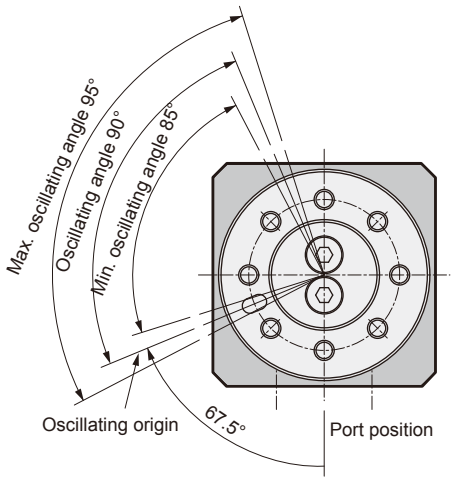

●SFRT-□-180

