

Cylinder with length measuring sensor

SSD-LN Series

● Bore size: ø12/ø16/ø20/ø32/ø50

CE * Excluding display RoHS CAD

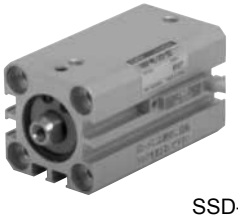

SSD-LN

Cylinder section specifications

● SSD-**LN Series**

Item \ Model No. (*1)	SSD-LN	SSD-O-LN
Actuation	Double acting/single rod	Double acting/single rod/low speed
Working fluid	Compressed air	
Max. working pressure MPa	1.0 (≈150 psi, 10 bar)	
Min. working pressure MPa	0.1 (≈15 psi, 1 bar)	0.05 (≈7.3 psi, 0.5 bar)
Proof pressure MPa	1.6 (≈230 psi, 16 bar)	
Ambient temperature °C	-10 (14°F) to 60 (140°F) (no freezing)	
Bore size mm	ø12/ø16/ø20/ø32/ø50	
Stroke length mm	20/30(ø12/ø16), 20/50 (ø20/ø32/ø50)	
Stroke tolerance mm	0 to +1	
Port size	M5 (ø12/ø16/ø20), Rc1/8 (ø32), Rc1/4 (ø50)	
Piston speed mm/s	50 to 500	10 to 200
Cushion	None	
Lubrication	Not required (if necessary: turbine oil class 1 ISO VG32)	Not available
Non-rotating accuracy °	±2(ø12), ±1.5(ø16/ø20), ±1(ø32/ø50)	

*1 : Appearance and dimensions of cylinders are the same as the compact cylinder SSD-ML (double acting rotation-stop), but the internal structure differs. (This cylinder is for length measurement.)

Sensor, amplifier (separated) specifications

Refer to page 1470.

Display section specifications

Refer to page 1471.

Weight table

Unit (g)

Stroke length / Bore size	20	30	50
ø12	111	122	
ø16	135	157	
ø20	189		263
ø32	346		476
ø50	661		914

Length measuring sensor output characteristics

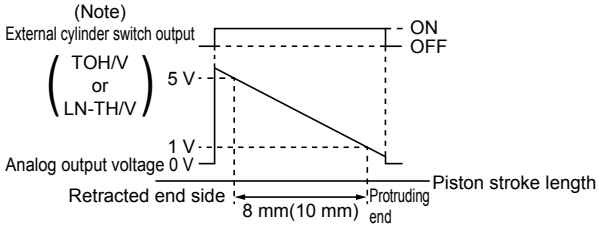

(Notes)
A separate analog output ON-OFF switchover switch for retrieving the analog output voltage is required at a random 8 mm (10 mm for display) interval of the full cylinder stroke. Combinations are shown below.

Analog output ON-OFF switch model No.	Output	Measured range length
TOH/V5	Analog output	8 mm
LN-TH/V	Display	10 mm

How to order

SSD - LN - 20 20 - 10 H C 1 2 5 LDS DN

- Ⓐ Drive equipment specifications
- Ⓑ Cylinder bore size
- Ⓒ Cylinder stroke
- Compatible sensor
- With connector
- Ⓓ Sensor lead wire outlet direction
- Ⓔ Sensor mounting surface (*1)
- Ⓕ Analog output ON-OFF change-over switch mounting surface (*1) (*2)
- Ⓖ Detecting position
- Ⓗ Amplifier unit output and shape
- Ⓘ Display (*4)

Code	Description
Ⓐ Drive equipment specifications	
SSD	Super compact (double acting)
SSD-O	Super compact (double acting/low speed)
Ⓑ Cylinder bore size (mm)	
12	ø12
16	ø16
20	ø20
32	ø32
50	ø50
Ⓒ Cylinder stroke (mm)	
20	20
30	30 (compatible with ø12, ø16 only)
50	50 (applicable except for ø12, ø16)
Ⓓ Sensor lead wire outlet direction	
H	Axial lead wire
V	Radial lead wire
Ⓔ Sensor mounting surface	
1	Right
2	Bottom side
3	Left
Ⓕ Analog output ON-OFF switch mounting surface	
1	Right
2	Bottom side
3	Left
Ⓖ Detecting position (mm)	
Refer to the figure at left. (*3)	
Ⓗ Amplifier unit output and shape	
LS	Amplifier separate/analog output
LDS	Amplifier separate/for display (LN-DN)
Ⓘ Display	
DN	Switch output section NPN display

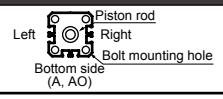

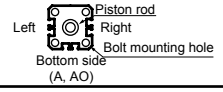

⚠ Precautions for model selection

*1 : Sensor and analog output ON-OFF switch cannot be installed on the same surface. (ø12, ø16 only)

*2 : The lead wire outlet direction of analog output ON-OFF switch, the same one as the sensor, will be selected automatically. Lead wire length is 5 m specifications.

*3 : If detection position is at "10", the detection position center is located 10 mm in front of the cylinder full stroke projecting end, with measured range length ±4 (±5) mm of this center point. The detecting position should be an integer.

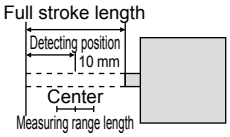

*4 : Two channels can be used for display. Ch1 is allocated by this model display. When using another channel, the display must be ordered separately.
Ⓐ-LN-ⒷⒸ-10ⒹⒺⒻⒼLDS

*5 : When ordering a single model for maintenance:
· Cylinder: Ⓐ-LN-ⒷⒸ
· Sensor: LN-10ⒹⒸ
· Amplifier unit: LN-Ⓗ
· Display: LN-DN
· Analog output ON-OFF switch
SW-TOH5 or TOV5: Select when the mounted actuator is ø20 and over in diameter with an analog output amplifier (LN-LS).
LN-TH or TV: Select for display.
When placing a discrete order, refer to product specifications sheet or handling precautions attached with the unit for details on setting.

● Cylinder mounting bracket model No.

LN - A - LB - 20

Code	Description
Ⓐ Bore size	
12	For ø12
16	For ø16
20	For ø20
32	For ø32
50	For ø50

Note: Two axial feet and eight hexagon socket head cap screws for installation are attached (4 pcs. for ø50).

Cylinder mounting bracket (axial foot) is available. Order separately when required. Appearance and outline dimensions are the same as for the compact cylinder, but mounting bolt material differs. (Stainless steel bolt dedicated)
Cylinder switches may be mountable in a separate groove for piston protrusion and pull end confirmation. Order separately when required.

● Discrete cylinder switch model No.

SW - T 0 H 3

- Ⓐ Output
- Ⓑ Lead wire outlet direction
- Ⓒ Lead wire length

Code	Description
Ⓐ Output	
0	Reed 2-wire
5	Reed 2-wire without indicator lamp
2	Proximity 2-wire
3	Proximity 3-wire
2Y	Proximity 2-wire 2-color display
3Y	Proximity 3-wire 2-color display
Ⓑ Lead wire outlet direction	
H	Axial lead wire
V	Radial lead wire
Ⓒ Lead wire length	
Blank	1 m (standard)
3	3 m (option)
5	5 m (option)

Dimensions CAD

● SSD-LN/SSD-O-LN
· ø12/ø16

*1 : Refer to pages 1472 and 1473 for outline dimensions of the sensor, amplifier (separated), and display.
*2 : Refer to the next page for dimensions.

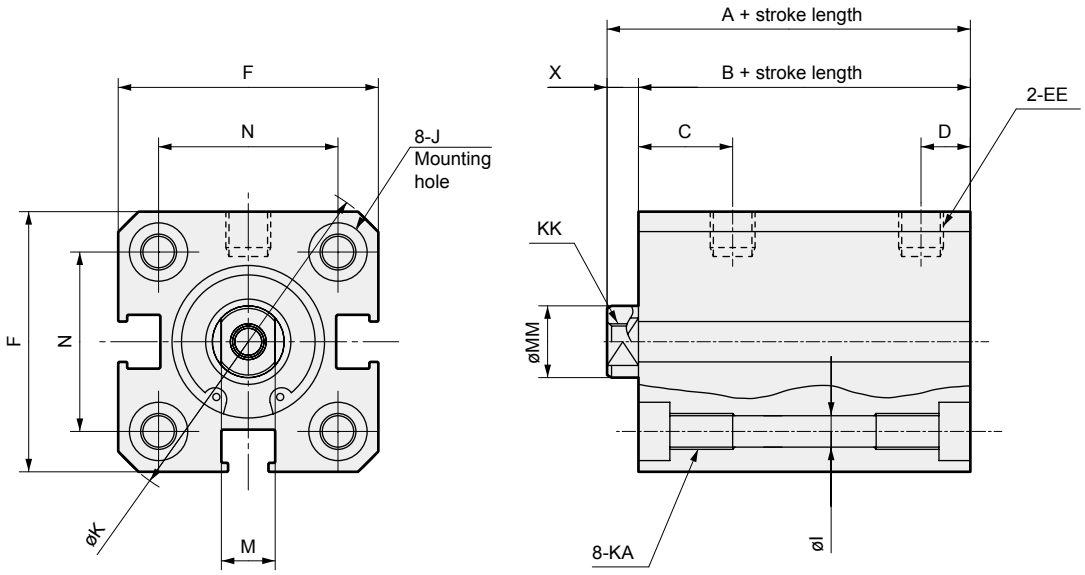

● SSD-LN/SSD-O-LN
· ø20

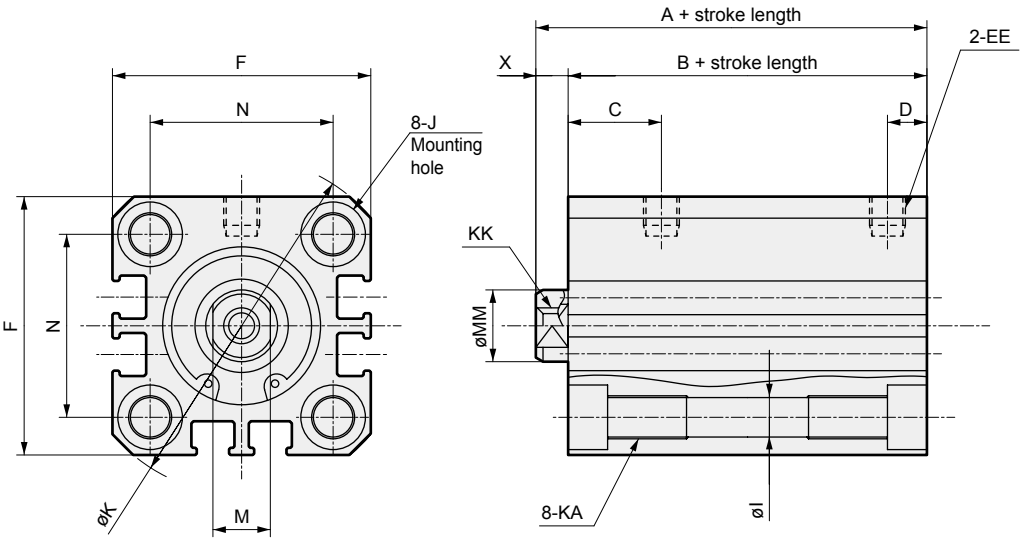

Dimensions

● SSD-LN/SSD-O-LN
·ø32/ø50

Note: Refer to pages 1472 and 1473 for outline dimensions of the sensor, amplifier (separated), and display.

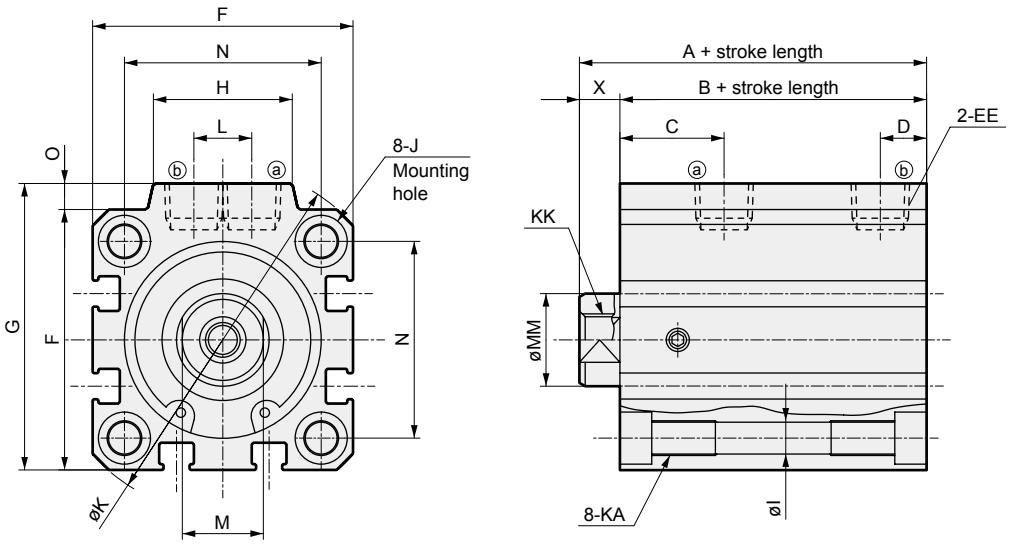

Code / Bore size (mm)	A	B	C	D	EE	F	G	H	I	J	K	KA	KK	L
ø12	35.5	32	10.5	5.5	M5	25	-	-	3.5	6.5 spot face depth 3.5	32	M4 depth 7	M3 depth 6	-
ø16	35.5	32	10.5	5.5	M5	29	-	-	3.5	6.5 spot face depth 3.5	38	M4 depth 7	M4 depth 8	-
ø20	39	34.5	13	5.5	M5	36	-	-	5.5	9 spot face depth 5.5	47	M6 depth 11	M5 depth 7	-
ø32	50	43	18	8	RC1/8	45	49.5	24	5.5	9 spot face depth 5.5	60	M6 depth 11	M8 depth 13	10
ø50	53.5	45.5	15.5	10.5	RC1/4	64	71	33	6.9	11 spot face depth 6.5	86	M8 depth 13	M10 depth 15	15

Code / Bore size (mm)	M	MM	N	O	X	Remarks
ø12	5	6	15.5	-	3.5	Overall length is 5 mm longer than standard product (SSD-ML). Other dimensions are the same as standard products.
ø16	6	8	20	-	3.5	Overall length is 5 mm longer than standard product (SSD-ML). Other dimensions are the same as standard products.
ø20	8	10	25.5	-	4.5	Dimensions are the same as standard product (SSD-ML).
ø32	14	16	34	4.5	7	Dimensions are the same as standard product (SSD-ML).
ø50	18	20	50	7	8	Dimensions are the same as standard product (SSD-ML).