

Shock absorber

SCK Series

● Max. energy absorption: 0.049 to 588J

RoHS CAD

Specifications

Item		SCK																
Series		0.005	0.01	0.03	0.3	0.6	1.2	2.6	6.5	8	12	20	30	40	60	0.25 M	0.5 M	1.0 M
Type/Classification		Spring return without adjuster			Spring return with adjuster											Spring return with adjuster (thread pitch: large)		
Max. energy absorption	J	0.049	0.098	0.294	2.94	5.88	11.8	25.5	63.7	78.4	118	196	294	392	588	3.43	11.8	74.5
O.D. thread size	mm	M10x1.0	M12x1.0	M16x1.0	M20x1.0		M25x1.5		M30x1.5		M40x1.5				M45x1.5	M14x1.5	M20x1.5	M27x3.0
Stroke	mm	7	10				15		25			40	60	70		10	15	30
Max. absorbed energy per hour	kJ/hr	0.135	0.27	0.98	8.1	10.8	21.6	39	78	86.4		108	126	120	144	9.2	21.2	80.5
Max. colliding speed	m/s	1.0			1.5	2.0		2.5			3.0				4.0	1.0	2.0	2.5
Max. operating frequency	Cycle/min.	45			30		25	20	18	12	9	7	5	4		45	30	18
Ambient temperature	°C	-10 (14°F) to 80 (176°F)																
Max. load (resistance)	N	39	59	147	540	1000	1400	3100	4600	5700	8600	9000		10000	15000	630	1440	4560
Return time	S	0.3 or less			0.4 or less			0.5 or less				0.6 or less				0.4 or less		0.5 or less
Weight	kg	0.02	0.04	0.07	0.2		0.32		0.63		1.17	1.25	1.39	1.45	2.05	0.05	0.13	0.39
Return Spring force	When extended N	1.2	2.0	5.9	5.9		6.9		12.0		20.0				29.0	3.9	5.5	7.6
	When compressed N	2.6	5.0	10.5	11.3		17.2		30.0		39.0	51.0	68.0	75.0	84.0	8.4	11.5	21.0
Copper and PTFE free specifications		—			Standard													

Note: Min. absorbed energy should be 1/5 of max. absorbed energy.

How to order

SCK - 00 - 0.3 - N1

- SCK
- 00 — Ⓐ Mounting
- 0.3 — Ⓑ Series
- N1 — Ⓒ Option

Code	Description
Ⓐ Mounting	
00	Basic
FA	Flange
Ⓑ Series (max. energy absorption)	
0.005	0.049 J
0.01	0.098 J
0.03	0.294 J
0.3	2.94 J
0.6	5.88 J
1.2	11.8 J
2.6	25.5 J
6.5	63.7 J
8	78.4 J
12	118 J
20	196 J
30	294 J
40	392 J
60	588 J
0.25 M	3.43 J
0.5 M	11.8 J
1.0 M	74.5 J
Ⓒ Option	
Blank	Standard
N1	With stop nut

Precautions for model No. selection

*1 :3 hexagon nuts are provided for N1 specifications products.

[Example of model No.]

SCK-00-0.3-N1

Model: Shock absorber
Ⓐ Mounting : Basic
Ⓑ Series : Max. energy absorption 2.94 J
Ⓒ Option : With stop nut

How to order options

● Flange bracket (1 pc.)

SCK - 0.01 - FA

Ⓑ Series

● Stop nut + hexagon nut (each 1 pc.)

SCK - 0.01 - N1

Ⓑ Series

● Hexagon nut (1 pc.)

SCK - 0.01 - NT

Ⓑ Series

Shock absorber and other buffers

As shown at right:

- The spring accumulates energy and functions as spring return force at the stroke end.
- Cylinder cushion (single orifice connected to hydraulic cylinder) increases resistance sharply at collision and does not decelerate smoothly.
- Shock absorbers without adjuster have a preset level of energy that is absorbed and so working conditions are limited (SCK-00-0.03 or below).
- Shock absorbers with adjuster have roughly constant resistance throughout the stroke, uniformly decelerating the object's speed. The curve moves in parallel vertically when adjusted, and collision energy is absorbed appropriately.

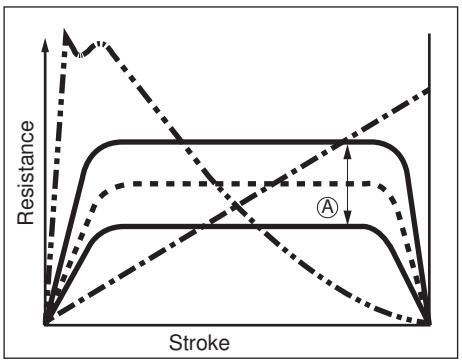

Spring
Cylinder cushion
Shock absorber without adjuster
Shock absorber
Ⓐ: The shock absorber is adjusted with the adjuster.

Internal structure and operational explanation

● SCK-00-0.005
00-0.01
00-0.03

Cannot be disassembled

Collision

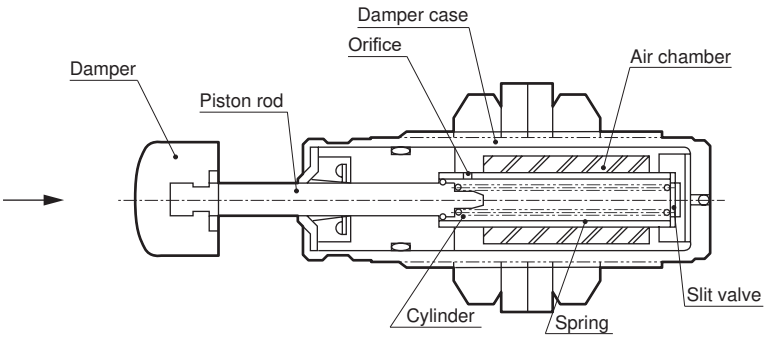

Return

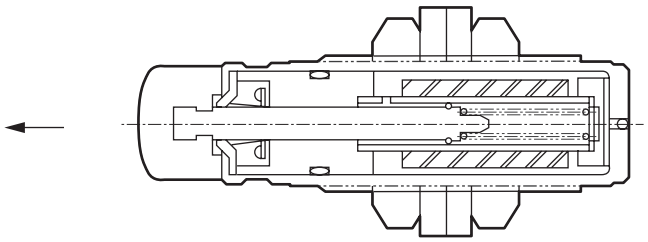

Collision

Collision force applied to the damper pushes the piston rod and pressurizes oil in the cylinder. When the generated hydraulic pressure passes through the orifice and flows into the damper case, shock is absorbed.
Oil flowing into the damper case pressurizes the air chamber and decreases air chamber volume.
Note) With this product structure, internal pressure increases with workpiece speed during collision, generating resistance and absorbing energy. Resistance may thus appear low when pushed by hand, but the product is not defective.

Return

When the colliding workpiece is removed, the piston rod is pushed out by the internal spring. At the same time, the slit valve (check valve) is opened by pressure in the air chamber. Oil flows to the inner pipe and at completion, the slit valve closes.

● SCK-00-0.3 to 60

Cannot be disassembled

Collision

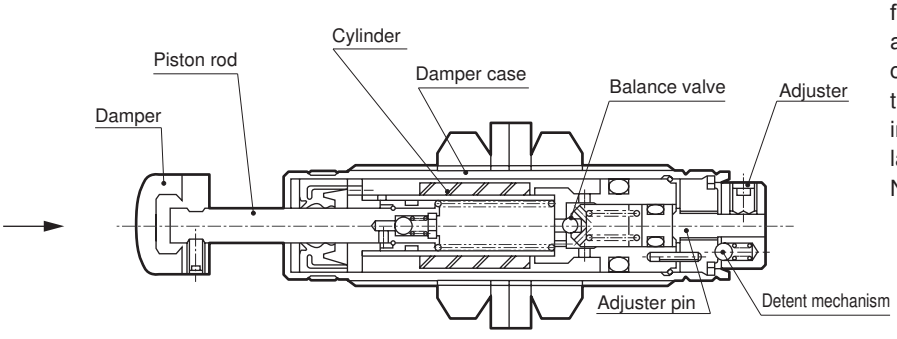

Return

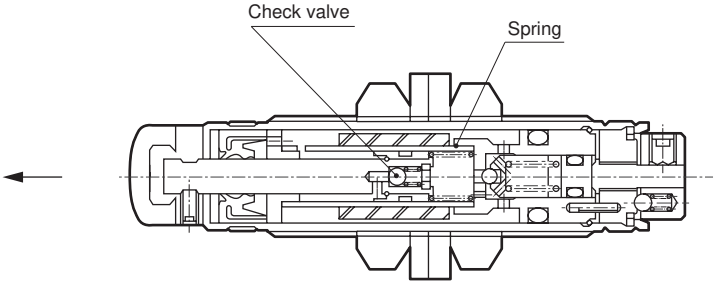

Collision

Collision force applied to the damper pushes the piston via the piston rod and pressurizes oil in the cylinder. When the generated hydraulic pressure passes through the orifice and balance valve and flows into the damper case, shock is absorbed. When the adjuster is turned clockwise, the adjustable pin moves and the force of the balance valve spring increases. Oil flow is decreased and a larger colliding force can be withstood.
Note) With this product structure, internal pressure increases with workpiece speed during collision, generating resistance and absorbing energy. Resistance may thus appear low when pushed by hand, but the product is not defective.

Return

When the colliding workpiece is removed, the piston rod is pushed out by the internal spring. At the same time, the check valve is opened by pressure in the air chamber. Oil flows to the inner pipe and at completion, the check valve closes.

Dimensions

● SCK-00-0.005
0.01
0.03

Basic (00)

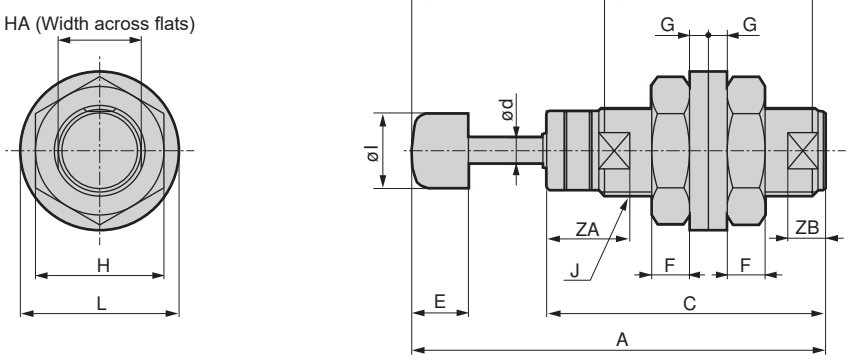

Code	Basic (00)														
Model No.	A	C	E	F	G	H	I	J	L	M	N	d	HA	ZA	ZB
SCK-00-0.005	41.5	27	7	4	2	14	8	M10x1.0	18	21.3	18.5	3.0	9	9	4
SCK-00-0.01	55	37	7.5	5	2.5	17	10	M12x1.0	21	25.5	27.5	3.5	11	11	5
SCK-00-0.03	70	49.5	10	6.5	2.5	22	14	M16x1.0	27	28.3	39.5	4.0	15	12	6

● SCK-00-0.3 to 60, 0.25 M to 1.0 M
(Screw pitch large)

Basic (00)

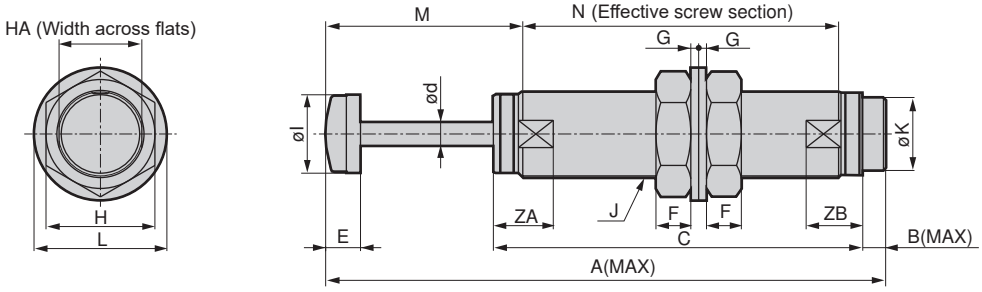

Code	Basic (00)																
Model No.	A	B	C	E	F	G	H	I	J	K	L	M	N	d	HA	ZA	ZB
SCK-00-0.3	94.6	5.8	66.8	11	8	2.9	27	16	M20x1.0	13.5	33	33.5	45.7	5	17	17.5	16
SCK-00-0.6	94.6	5.8	66.8	11	8	2.9	27	16	M20x1.0	13.5	33	33.5	45.7	5	17	17.5	16
SCK-00-1.2	122.5	7.5	86	13	10	2.9	32	22	M25x1.5	19.5	39	40.5	65.4	6	24	21	18
SCK-00-2.6	122.5	7.5	86	13	10	2.9	32	22	M25x1.5	19.5	39	40.5	65.4	6	24	21	18
SCK-00-6.5	157.4	7.9	109.5	14	12	3.6	41	27	M30x1.5	23.5	50	51.5	89.4	8	27	21.5	19.5
SCK-00-8	157.4	7.9	109.5	14	12	3.6	41	27	M30x1.5	23.5	50	51.5	89.4	8	27	21.5	19.5
SCK-00-12	175.6	10.5	123.1	16	16	3.6	50	36	M40x1.5	33.5	61	55.5	98.5	11	38	27.5	26
SCK-00-20	205.6	10.5	138.1	16	16	3.6	50	36	M40x1.5	33.5	61	70.5	113.5	11	38	27.5	26
SCK-00-30	257.1	10.5	169.6	16	16	3.6	50	36	M40x1.5	33.5	61	90.5	145	11	38	27.5	26
SCK-00-40	277.1	10.5	179.6	16	16	3.6	50	36	M40x1.5	33.5	61	100.5	155	11	38	27.5	26
SCK-00-60	298.4	10.9	198.6	18	18	4.5	55	42	M45x1.5	37.5	67	102.9	172.5	12.5	43.5	31.5	30
SCK-00-0.25M	96.6	6.5	69.1	10	5.5	2.5	19	12	M14x1.5	10	24	26.1	53.5	4	12.4	10	15.5
SCK-00-0.5M	111.4	6.5	77.9	11	8	2.9	27	16	M20x1.5	13.5	33	33	60.8	5	17	12	17.5
SCK-00-1.0M	161.6	7.7	109.9	13	10	2.9	32	22	M27x3.0	19.5	39	50.5	90.3	6	24	15	22

Dimensions: Option (flange [mounting bracket]) CAD

● SCK-0.005-**
0.01
0.03

Flange (FA)

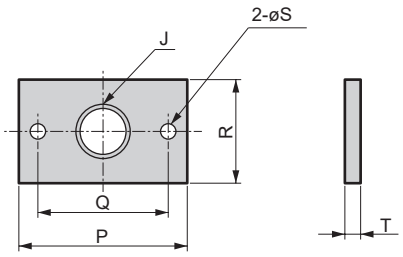

Stop nut (N1)

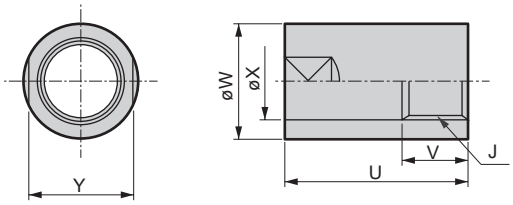

● SCK-0.3 to 60, 0.25M to 1.0M-**
(Screw pitch large)

Flange (FA)

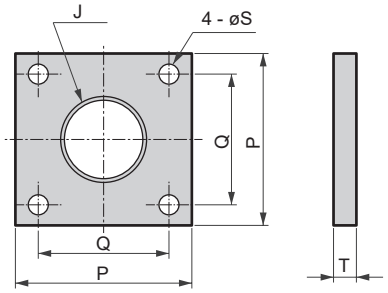

Stop nut (N1)

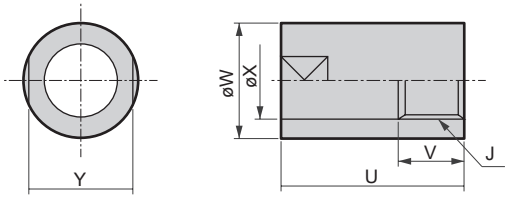

Code	Flange (FA)						Weight	Stop nut (N1)						Weight
Model No.	J	P	Q	R	S	T	(g)	J	U	V	W	X	Y	(g)
SCK-0.005-**	M 10 x 1.0	42	30	20	5.5	2.3	14	M 10 x 1.0	17	10	15	11	13	12
SCK-0.01-**	M 12 x 1.0	46	34	20	5.5	3.6	22	M 12 x 1.0	23	10	19	13	17	19
SCK-0.03-**	M 16 x 1.0	52	40	32	5.5	4.5	51	M 16 x 1.0	23	10	22	17	19	30
SCK-0.3-**	M 20 x 1.0	52	38	-	6.5	6	107	M 20 x 1.0	32.5	15	26	21	24	52
SCK-0.6-**	M 20 x 1.0	52	38	-	6.5	6	107	M 20 x 1.0	32.5	15	26	21	24	52
SCK-1.2-**	M 25 x 1.5	52	38	-	6.5	6	100	M 25 x 1.5	35	15	32	26	30	82
SCK-2.6-**	M 25 x 1.5	52	38	-	6.5	6	100	M 25 x 1.5	35	15	32	26	30	82
SCK-6.5-**	M 30 x 1.5	66	48	-	8.5	6	163	M 30 x 1.5	40	15	40	31	36	162
SCK-8-**	M 30 x 1.5	66	48	-	8.5	6	163	M 30 x 1.5	40	15	40	31	36	162
SCK-12-**	M 40 x 1.5	84	64	-	10.5	9	390	M 40 x 1.5	69.5	20	50	41	46	362
SCK-20-**	M 40 x 1.5	84	64	-	10.5	9	390	M 40 x 1.5	69.5	20	50	41	46	362
SCK-30-**	M 40 x 1.5	84	64	-	10.5	9	390	M 40 x 1.5	69.5	20	50	41	46	362
SCK-40-**	M 40 x 1.5	84	64	-	10.5	9	390	M 40 x 1.5	69.5	20	50	41	46	362
SCK-60-**	M 45 x 1.5	84	64	-	10.5	9	390	M 45 x 1.5	70	20	60	46	55	649
SCK-0.25M-**	M 14 x 1.5	52	38	-	6.5	6	115	M 14 x 1.5	26.5	10	20	15	17	30
SCK-0.5M-**	M 20 x 1.5	52	38	-	6.5	6	108	M 20 x 1.5	36.5	15	26	21	24	59
SCK-1.0M-**	M 27 x 3.0	52	38	-	6.5	6	106	M 27 x 3.0	45.5	15	35	28	32	134