

Simplified floating fitting

FK Series

● Cylinder diameter: ø6 to ø100

RoHS CAD

Specifications

Model No.		Allowable load *1 (N)	Allowable eccentricity (mm)	Backlash amount in thrust direction (mm)
Male thread	Female thread			
FK-M3-N	FK-M3	63	±0.3	0.1 to 0.3
FK-M4-N	FK-M4	110		
FK-M5-N	FK-M5	179		
FK-M6-N	FK-M6	253		
FK-M8-N	FK-M8x1.0	462		
——	FK-M8x1.25	462		
FK-M10-N	FK-M10	734		
——	FK-M12	1069		
——	FK-M14	1466		
FK-M16-N	FK-M16	2003	±0.7	
——	FK-M18	2448		
FK-M20-N	——	3130		
——	FK-M22	3896		
——	FK-M26	6219		

*1: Allowable load indicates static load.

How to order

● Simplified floating fitting

FK - M3-N

Model No.

Ⓐ Thread size

Code	Description	
Ⓐ Thread size		
M3-N	M3x0.5	Male thread
M4-N	M4x0.7	
M5-N	M5x0.8	
M6-N	M6x1.0	
M8-N	M8x1.25	
M10-N	M10x1.5	
M16-N	M16x2.0	
M20-N	M20x2.5	
M3	M3x0.5	Female thread
M4	M4x0.7	
M5	M5x0.8	
M6	M6x1.0	
M8x1.0	M8x1.0	
M8x1.25	M8x1.25	
M10	M10x1.25	
M12	M12x1.5	
M14	M14x1.5	
M16	M16x1.5	
M18	M18x1.5	
M22	M22x1.5	
M26	M26x1.5	

Specifications for rechargeable battery (Catalog No. CC-1226A)

FK - [Thread size] - P40

● Design compatible with rechargeable battery manufacturing process

* Contact CKD for details.

Dimensions

Material : Steel
Surface treatment : Nickeling

● Bracket (1)

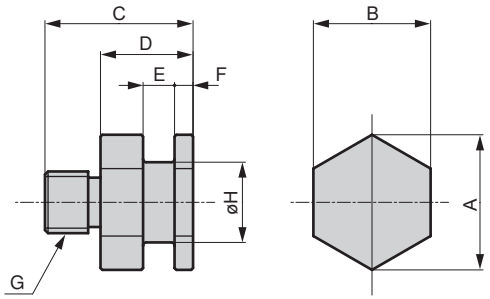

● Bracket (2)

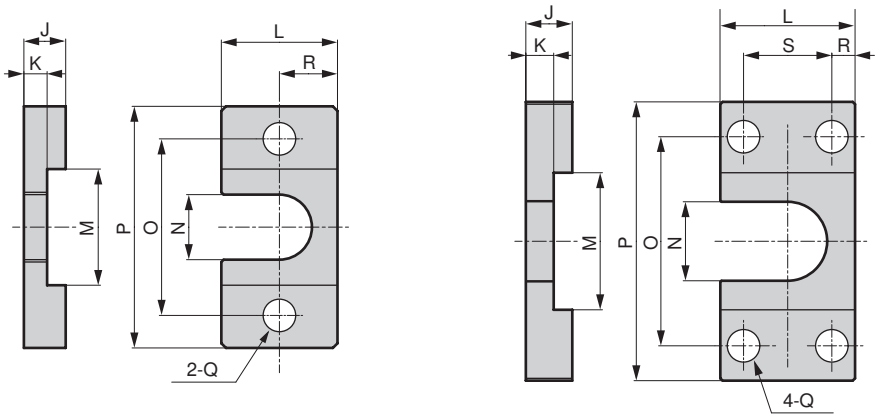

M3 to M16 M20

Bracket (1)

Model No.	Cylinder	A	B	C	D	E	F	G	H	Weight g
FK-M3-N	SSD/SSD2-12	11.6	10	15	10	$3.1^{+0.1}_{0}$	2	M3x0.5	6	5.3
FK-M4-N	SSD/SSD2-16	11.6	10	15.5	10	$3.1^{+0.1}_{0}$	2	M4x0.7	6	5.5
FK-M5-N	SSD/SSD2-20, FCD-25	13.9	12	16.5	10	$3.1^{+0.1}_{0}$	2	M5x0.8	8	8.3
FK-M6-N	SSD/SSD2-25, FCD-32	13.9	12	19	10	$3.1^{+0.1}_{0}$	2	M6x1.0	8	8.9
FK-M8-N	SSD/SSD2-32, 40, FCD-40, 50	21.9	19	23	15	$5.1^{+0.1}_{0}$	3	M8x1.25	13	30.8
FK-M10-N	SSD/SSD2-50, 63, FCD-63	21.9	19	24	15	$5.1^{+0.1}_{0}$	3	M10x1.5	13	32.7
FK-M16-N	SSD/SSD2-80	37	32	31	20	$7.1^{+0.1}_{0}$	4	M16x2.0	23	122.5
FK-M20-N	SSD/SSD2-100	53.1	46	43	28	$12.1^{+0.1}_{0}$	7	M20x2.5	32	333

Bracket (2)

Model No.	Cylinder	J	K	L	M	N	O	P	Q	R	S	Weight g
FK-M3-N	SSD/SSD2-12	6	$3^{0}_{-0.1}$	16	14	7	24	34	4.5	8	—	16
FK-M4-N	SSD/SSD2-16	6	$3^{0}_{-0.1}$	16	14	7	24	34	4.5	8	—	16
FK-M5-N	SSD/SSD2-20, FCD-25	6	$3^{0}_{-0.1}$	19	16	9	26	36	4.5	9.5	—	19.6
FK-M6-N	SSD/SSD2-25, FCD-32	6	$3^{0}_{-0.1}$	19	16	9	26	36	4.5	9.5	—	19.6
FK-M8-N	SSD/SSD2-32, 40, FCD-40, 50	9	$5^{0}_{-0.1}$	25	25	14	38	52	7	12.5	—	54.5
FK-M10-N	SSD/SSD2-50, 63, FCD-63	9	$5^{0}_{-0.1}$	25	25	14	38	52	7	12.5	—	54.5
FK-M16-N	SSD/SSD2-80	12	$7^{0}_{-0.1}$	44	42	25	62	85	11	22	—	216
FK-M20-N	SSD/SSD2-100	22	$12^{0}_{-0.1}$	65	59	34	90	120	14	13.5	38	788

Dimensions

Material : Steel
Surface treatment : Nickeling

● Bracket (1)

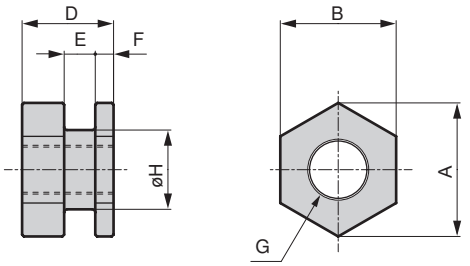

● Bracket (2)

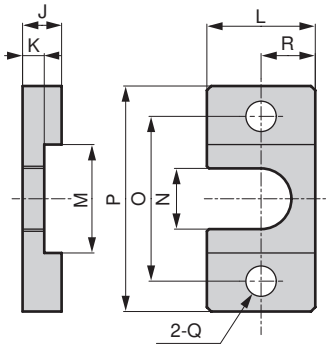

M3 to M18

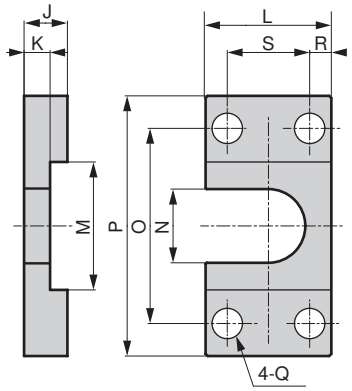

M22 to M26

Bracket (1)

Model No.	Cylinder	A	B	D	E	F	G	H	Weight g
FK-M3	SCPD3-6, CAT-6, SMG-6	11.6	10	10	$3.1^{+0.1}_{0}$	2	M3x0.5	6	4.6
FK-M4	SCPD3-10, CAT-10, SMG-10	11.6	10	10	$3.1^{+0.1}_{0}$	2	M4x0.7	6	4.1
FK-M5	SCPD3-16, CAT-15, SMG-16 SSD-12-N	13.9	12	10	$3.1^{+0.1}_{0}$	2	M5x0.8	8	6.2
FK-M6	SMG-20, SSD/SSD2-16-N	13.9	12	10	$3.1^{+0.1}_{0}$	2	M6x1.0	8	5.7
FK-M8x1.0	CMK2-20, CMA2-20, JSK2-20, JSM2-20	21.9	19	15	$5.1^{+0.1}_{0}$	3	M8x1.0	13	23
FK-M8x1.25	SMG-25, SSD/SSD2-20-N, SCM-20	21.9	19	15	$5.1^{+0.1}_{0}$	3	M8x1.25	13	23.4
FK-M10	CMK2-25/32, CMA2-30, SMG-32, SSD/SSD2-25-N, SCG-32, SCM-25/32, FCD-25-N, JSK2-25/32, JSM2-30	21.9	19	15	$5.1^{+0.1}_{0}$	3	M10x1.25	13	20.2
FK-M12	CMK2-40, CMA2-40, JSK2-40, JSM2-40	27.7	24	15	$5.1^{+0.1}_{0}$	3	M12x1.5	18	35.7
FK-M14	SCA2-40, SSD/SSD2-32/40-N/SCG-40, SCM-40, FCD-32/40-N, JSC3-40	27.7	24	15	$5.1^{+0.1}_{0}$	3	M14x1.5	18	31.2
FK-M16	CAV2-50	37	32	20	$7.1^{+0.1}_{0}$	4	M16x1.5	23	81.3
FK-M18	SCA2-50/63, SSD/SSD2-50/63-N, SCM-50/63, SCG-50/63, FCD-50/63-N, JSC3-50/63	37	32	20	$7.1^{+0.1}_{0}$	4	M18x1.5	23	73.1
FK-M22	SCA2-80, SSD/SSD2-80-N, JSC3-80, SCG-80, SCM-80, CAV2-75/100	53.1	46	28	$12.1^{+0.1}_{0}$	7	M22x1.5	32	226
FK-M26	SCA2-100, SSD/SSD2-100-N, SCM-100, JSC3-100, SCG-100	53.1	46	28	$12.1^{+0.1}_{0}$	7	M26x1.5	32	193

Bracket (2)

Model No.	Cylinder	J	K	L	M	N	O	P	Q	R	S	Weight g
FK-M3	SCPD3-6, CAT-6, SMG-6	6	$3^{0}_{-0.1}$	16	14	7	24	34	4.5	8	—	16
FK-M4	SCPD3-10, CAT-10, SMG-10	6	$3^{0}_{-0.1}$	16	14	7	24	34	4.5	8	—	16
FK-M5	SCPD3-16, CAT-15, SMG-16 SSD/SSD2-12-N	6	$3^{0}_{-0.1}$	19	16	9	26	36	4.5	9.5	—	19.6
FK-M6	SMG-20, SSD/SSD2-16-N	6	$3^{0}_{-0.1}$	19	16	9	26	36	4.5	9.5	—	19.6
FK-M8x1.0	CMK2-20, CMA2-20, JSK2-20, JSM2-20	9	$5^{0}_{-0.1}$	25	25	14	38	52	7	12.5	—	54.5
FK-M8x1.25	SMG-25, SSD/SSD2-20-N, SCM-20	9	$5^{0}_{-0.1}$	25	25	14	38	52	7	12.5	—	54.5
FK-M10	CMK2-25/32, CMA2-30, SMG-32, SSD/SSD2-25-N, SCG-32, SCM-25/32, FCD-25-N, JSK2-25/32, JSM2-30	9	$5^{0}_{-0.1}$	25	25	14	38	52	7	12.5	—	54.5
FK-M12	CMK2-40, CMA2-40	9	$5^{0}_{-0.1}$	32	32	19	50	70	9	16	—	94.5
FK-M14	SCA2-40, SSD/SSD2-32/40-N/SCG-40, SCM-40, FCD-32/40-N, JSC3-40	9	$5^{0}_{-0.1}$	32	32	19	50	70	9	16	—	94.5
FK-M16	CAV2-50	12	$7^{0}_{-0.1}$	44	42	25	62	85	11	22	—	216
FK-M18	SCA2-50/63, SSD/SSD2-50/63-N, SCM-50/63, SCG-50/63, FCD-50/63-N, JSC3-50/63	12	$7^{0}_{-0.1}$	44	42	25	62	85	11	22	—	216
FK-M22	SCA2-80, SSD/SSD2-80-N, JSC3-80, SCG-80, SCM-80, CAV2-75/100	22	$12^{0}_{-0.1}$	65	59	34	90	120	14	13.5	38	788
FK-M26	SCA2-100, SSD/SSD2-100-N, SCM-100, JSC3-100, SCG-100	22	$12^{0}_{-0.1}$	65	59	34	90	120	14	13.5	38	788