

Explosion-proof direct acting 2-port solenoid valve
General purpose

AB41E2 Series

- Pressure and explosion proof construction d2G2 (flame-proof grade 2/ignitability G2)
- Japan Conformity Certificate No.: No. T64351
- China Conformity Certificate No. 2020322307003155
- China explosion-proof standard NEPSI acquired GYB20. 2593X
- NC (open when energized)
- Port size: Rc1/4, Rc3/8

RoHS CAD

JIS symbol

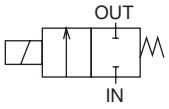

Common specifications

Item	AB41E2
Working fluid	Air/Water/kerosene/Oil (50 mm²/s or less)/steam
Working pressure differential MPa	0 to 5 (refer to max. working pressure differential in individual specifications.)
Max. working pressure MPa	5(1 when fluid is steam)
Proof pressure (water pressure) MPa	25
Fluid temperature °C	-10 to 181
Ambient temperature °C	-10 to 40
Thermal class	Class 180 (H)
Atmosphere	Outdoors/explosive gas (flame-proof grade 1 to 2/ignitability G1 to G2)
Valve structure	Direct acting poppet structure
Valve seat leakage cm³/min (ANR)	300 or less (air)
Mounting orientation	Unrestricted
Degree of protection	IP 65 or equiv.

Individual specifications

Item / Model No.		Port size	Orifice size (mm)	Max. working pressure differential (MPa) Air AC	Water(hot)/Kerosene AC	Oil (50 mm²/s) AC	Steam AC	Rated voltage	Apparent power (VA) When holding 50 Hz	When holding 60 Hz	When starting 50 Hz	When starting 60 Hz	Power consump (W) AC 50 Hz	AC 60 Hz	Weight (kg)
AB41E2-02	-1	Rc1/4	1.5	5.0	4.5	4.0	1.0	100 VAC 50/60 Hz 110 VAC 60 Hz	18	15	29	24	8	7	1.0
	-2		2.0	3.0	2.7	2.5	1.0								
	-3		3.0	1.5	1.3	0.9	1.0								
	-4		3.5	1.2	0.9	0.6	0.9								
	-5		4.0	1.0	0.7	0.5	0.7								
	-6		5.0	0.6	0.4	0.25	0.4								
	-7		7.0	0.25	0.2	0.15	0.2								
AB41E2-03	-1	Rc3/8	1.5	5.0	4.5	4.0	1.0	200 VAC 50/60 Hz 220 VAC 60 Hz							
	-2		2.0	3.0	2.7	2.5	1.0								
	-3		3.0	1.5	1.3	0.9	1.0								
	-4		3.5	1.2	0.9	0.6	0.9								
	-5		4.0	1.0	0.7	0.5	0.7								
	-6		5.0	0.6	0.4	0.25	0.4								
	-7		7.0	0.25	0.2	0.15	0.2								

*1: The voltage fluctuation range must be within -10 to +5% of the rated voltage.

Flow Rate Characteristics

Model No.		Port size	Orifice size (mm)	Flow Rate Characteristics C[dm³/(s·bar)]	b	Cv
AB41E2-02/03	-1	Rc 1/4 Rc 3/8	1.5	0.29	0.53	0.1
	-2		2.0	0.53	0.52	0.15
	-3		3.0	1.1	0.52	0.31
	-4		3.5	1.7 [1.5]	0.49 [0.47]	0.42 [0.40]
	-5		4.0	2.1 [1.9]	0.48 [0.47]	0.54 [0.48]
	-6		5.0	3.0 [2.6]	0.42 [0.38]	0.8 [0.62]
	-7		7.0	4.8 [4.6]	0.29 [0.37]	1.0 [0.82]

*1: Effective cross-sectional area S and sonic conductance C are converted as S ≈ 5.0 x C.
*2: Dimensions shown in [ ] are for stainless steel body.

How to order

AB41E2 - 02 - 4 - C 4 T B CN - AC100V

- AB41E2 — Model No.
- 02 — Ⓐ Port size
- 4 — Ⓑ Orifice size
- C — Ⓒ Body/sealant combination
- 4 — Ⓓ Coil type
- T — Ⓔ External wire pull method *1
- B — Ⓕ Other options
- CN — Ⓖ Organizations for explosive-proof certification
- AC100V — Ⓗ Voltage *3 *4

Code	Description	Code	Description	Code	Description
Ⓐ Port size					
02	Rc1/4	**2G**	G1/4	**2N**	1/4NPT
03	Rc3/8	**3G**	G3/8	**3N**	3/8NPT

Ⓑ Orifice size	
1	ø1.5
2	ø2
3	ø3
4	ø3.5
5	ø4
6	ø5
7	ø7

Ⓒ Body/sealant combination

		Body	Seal	Treatment	Remarks
C	Std.	Copper alloy	PTFE	-	Air/water/kerosene/oil/steam (up to 181°C)
F	Option	Stainless steel	PTFE	-	
K	Option	Copper alloy	PTFE	Oil-prohibited	
N	Option	Stainless steel	PTFE	Oil-prohibited	

Refer to Intro Page 39 for reference on material combinations.

Ⓓ Coil type	
4	Thermal class 180 (H) explosion-proof coil

Ⓔ External wire pull method		
T	Std.	Conduit screw connection (G1/2) *5
L	Option	Pressure proof packing seal (G1/2) connection, cable O.D. ø7.5 to 8.4
M	Option	Pressure proof packing seal (G1/2) connection, cable O.D. ø8.5 to 9.4

Ⓕ Other options	
Blank	No option
B	With mounting plate

Ⓖ Organizations for explosive-proof certification	
Blank	Japan Certification (TIIS) * 6
CN	China certification (NEPSI) * 7

Ⓗ Voltage	
AC100V	100 VAC 50/60 Hz
AC200V	200 VAC 50/60 Hz

[Example of model No.]

AB41E2-02-4-C4TBCN-AC100V

Model: AB41E2

- Ⓐ Port size : Rc1/4
- Ⓑ Orifice size : ø3.5
- Ⓒ Body/sealant combination : Body - copper alloy/sealant - PTFE
- Ⓓ Coil : Thermal class 180 (H) explosion-proof coil
- Ⓔ External wire pull method : Conduit screw connection (1/2NPT)
- Ⓕ Other options : With mounting plate
- Ⓖ Organizations for explosive-proof certification : China Certification (NEPSI)
- Ⓗ Voltage : 100 VAC 50/60 Hz

⚠ Precautions for model No. selection

*1 : A pressure proof packing seal (G3/4) connection is also available. Contact CKD for more information.
Note that the conduit connection (G3/4) is not available.
*2 : Tropicalization (rust-proof coating) is available as a measure against rust. Contact CKD for more information.
*3 : 100 VAC coil is compatible with 100 VAC 50/60 Hz and 110 VAC 60 Hz, and 200 VAC coil is compatible with 200 VAC 50/60 Hz and 220 VAC 60 Hz.
*4 : Other voltages as below are also available. Contact CKD for details.
12, 24, 48, 110, 115, 120, 220, 240, 380, 400, 415, 440, 480, 500 VAC
*5 : China certification will be 1/2 NPT.
*6 : Japan certification (TIIS) is included.
*7 : China certification (NEPSI) is included.

Internal structure and parts list

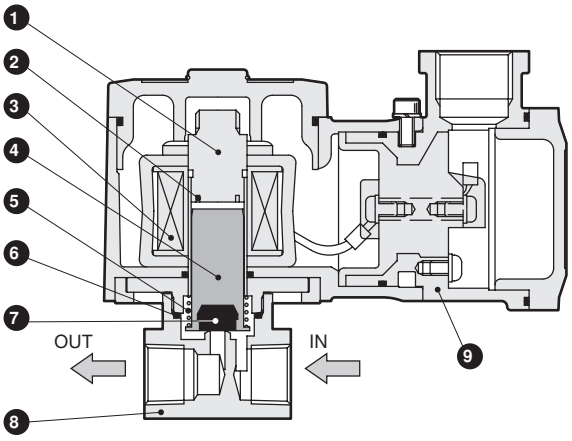

Cannot be disassembled

Part No.	Part name	Material	
1	Core assembly	SUS405 or equiv., 316L/403	Stainless steel
2	Shading coil	Cu (Ag for stainless steel body)	Copper (silver for stainless steel body)
3	Coil	–	–
4	Plunger	SUS405 or equiv.	Stainless steel
5	Plunger spring	SUS304	Stainless steel
6	O-ring	PTFE	Tetrafluoroethylene resin
7	Valve seal	PTFE	Tetrafluoroethylene resin
8	Body	C3771(SUS303)	Brass (stainless)
9	Coil case	ADC12	Aluminum die-casting

( ) shows options.

Dimensions CAD

● Conduit screw (G1/2) connection
AB41E2-02/03-1 to 7-*4T

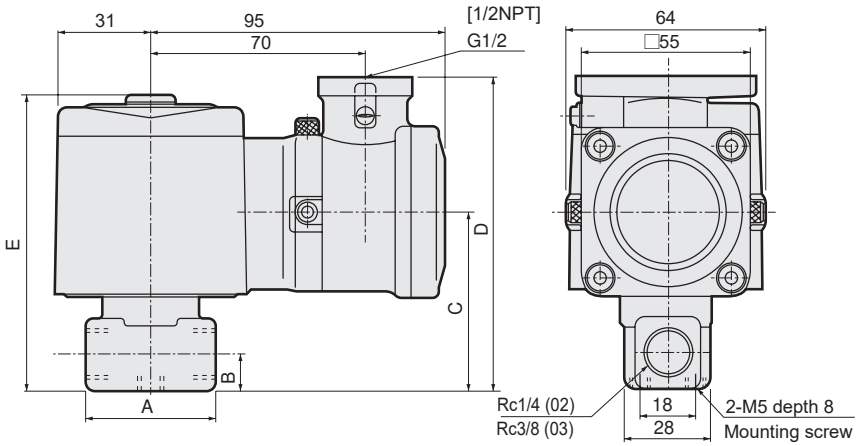

Dimensions shown in [ ] are for Chinese certified products.

Model No.	A	B	C	D	E
AB41E2-02-1 to 6	36	11	54	97	92
AB41E2-02-7 AB41E2-03-1~7	40	12	57	100	95

Optional dimensions

● Stainless steel body
AB41E2-02/03-1 to 7- F,N

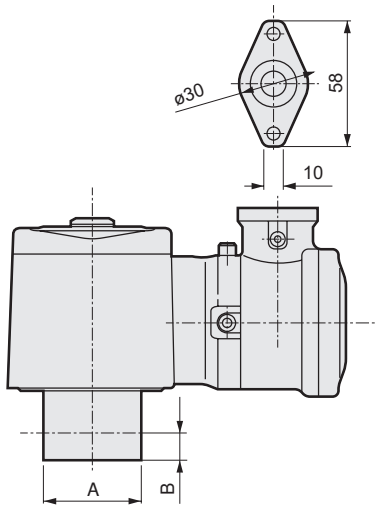

● Pressure proof packing (G1/2) connection
AB41E2-02/03-1 to 7- L,M

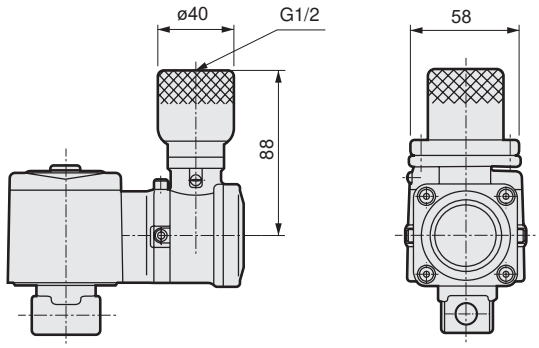

Model No.	A	B
AB41E2-02-1 to 6□	ø37.5	11
AB41E2-02-7□ AB41E2-03-1 to 7□	ø45	12

● Mounting plate
AB41E2-02/03-1 to 7-*** B AB

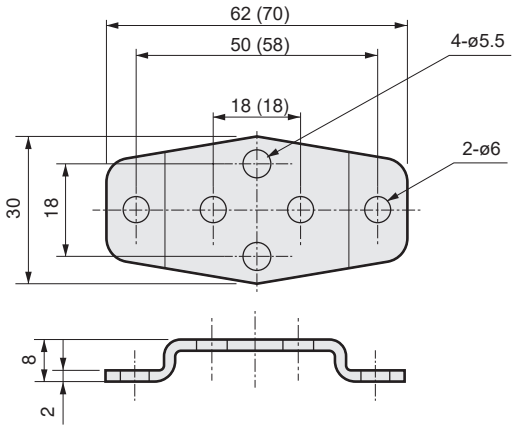

( )Dimensions shown in are for mounting. Plate No.2

Mounting plate model	Compatibility	
AB4-GE-100106-MOUNT-PLATE-KIT (Mounting plate No.1)	● AB41E2-02/03-1 to 7 ● AB41E2-02-1 to 6	Copper alloy body Stainless steel body
AB4-GE-100159-MOUNT-PLATE-KIT (Mounting plate No.2)	● AB41E2-02-7 ● AB41E2-03-1 to 7	Stainless steel body Stainless steel body

* Material: Steel/Zinc plated