

Motorized 2-port ball valve

MXB1/MXB1F Series

● Port size: Rc3/8 to Rc2

RoHS CAD

JIS symbol

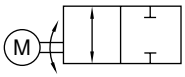

Common specifications

1 MPa ≈ 145.0 psi, 1 MPa = 10 bar

Item			MXB1 (standard bore)/MXB1F (full bore)						
Working fluid			Water, air, oil (500 mm²/s or less)						
Working pressure MPa			0 to 1.0 (refer to the working pressure in the individual specifications.)						
Proof pressure (water pressure) MPa			2.0 (≈290 psi, 20 bar)						
Fluid temperature °C			0 (32°F) to 80 (176°F) (no freezing)						
Ambient temperature °C			-10 (14°F) to 50 (122°F)						
Ambient humidity %			95 or less						
Mounting orientation			From vertical direction with the actuator on the top to horizontal direction. (Refer to page 784.)						
Pressurization direction			Arbitrary						
Degree of protection			IPX3 “rainproof” (standard and option T only)						
Electrical specifications			**MXB1-10**	**MXB1-15**	**MXB1-20**	**MXB1-25**	**MXB1-32**	**MXB1-40**	**MXB1-50**
				MXB1F-15	**MXB1F-20**		**MXB1F-25**	**MXB1F-32**	**MXB1F-40**
Rated voltage *1			100 VAC(50/60 Hz), 200 VAC(50/60 Hz), 12 VDC, 24 VDC						
Apparent power VA	Operating	100 VAC	4.9/5.9(50/60 Hz)				13/15(50/60 Hz)		
	Operating	200 VAC	5.4/6.2(50/60 Hz)				13/15(50/60 Hz)		
	Starting	100 VAC	4.9/5.9(50/60 Hz)				13/15(50/60 Hz)		
	Starting	200 VAC	5.4/6.2(50/60 Hz)				13/15(50/60 Hz)		
Average current value A *2		12 VDC	1.1				1.5		
		24 VDC	0.7				1.0		
Starting current A *2		12 VDC	1.8 or less				3 or less		
		24 VDC	1.2 or less				2 or less		
Power consumption W		AC	7				15		
		12 VDC	13				18		
		24 VDC	17				24		

MXB1 (standard bore) individual specifications

1 MPa ≈ 145.0 psi, 1 MPa = 10 bar

Item			MXB1-10 *3	MXB1-15	MXB1-20	MXB1-25	MXB1-32	MXB1-40	MXB1-50
Port size			Rc3/8	Rc1/2	Rc3/4	Rc1	Rc1¼	Rc1½	Rc2
Orifice size mm			10	10	15	20	25	32	40
Cv			10	6	16	29	50	98	125
Working pressure MPa			0 (≈0 psi, 0 bar) to 1.0 (≈150 psi, 10 bar)						0 to 0.5
Response time sec		AC	10/8(50/60 Hz)				13/11(50/60 Hz)		
		DC	8				10.5		
Frequency		AC	2 times/min. or less				1 time/min. or less		
*4		DC	1 time/min. or less				1 time/2 mins. or less		
Weight kg	Bronze body		1.2	1.2	1.4	1.5	2.5	3.0	3.7
	Stainless steel body		1.2	1.2	1.4	1.5	2.6	3.1	3.8

MXB1F (full bore) individual specifications

1 MPa ≈ 145.0 psi, 1 MPa = 10 bar

Item		MXB1F-15	MXB1F-20	MXB1F-25	MXB1F-32	MXB1F-40
Port size		Rc1/2	Rc3/4	Rc1	Rc1¼	Rc1½
Orifice size mm		15	20	25	32	40
Cv		23	51	66	114	176
Working pressure MPa		0 (≈0 psi, 0 bar) to 1.0 (≈150 psi, 10 bar)				0 to 0.5
Response time sec	AC	10/8(50/60 Hz)		13/11(50/60 Hz)		
	DC	8		10.5		
Frequency	AC	2 times/min. or less		1 time/min. or less		
*4	DC	1 time/min. or less		1 time/2 mins. or less		
Weight kg		1.4	1.5	2.5	3.0	3.7

*1 : Use the product within ±10% of the rated voltage.
*2 : Current values at the rated voltage.
*3 : MXB1-10 is a full bore.
*4 : Be sure to observe the specified frequency of use.
*5 : Consult with CKD for specifications not indicated above.

How to order

MXB1 - **32** - **0** **T** **M** - **1**

MXB1F

Model No.

Ⓐ Port size

Ⓑ Body/seat material

Ⓒ Other options *1 *2

Ⓓ Manual override *3

Ⓔ Voltage

Code	Description	Model No. MXB1 (Standard bore)	Model No. MXB1F (Full bore)
Ⓐ Port size			
10	Rc3/8 *4	●	
15	Rc1/2	●	●
20	Rc3/4	●	●
25	Rc1	●	●
32	Rc1 1/4	●	●
40	Rc1 1/2	●	●
50	Rc2	●	
Ⓑ Body/seat material			
0	Body - bronze/seat - PTFE	●	●
H	Body - bronze/seat - reinforced PTFE	●	●
E	Body - stainless steel/seat - PTFE	●	
W	Body - stainless steel/seat - reinforced PTFE	●	

Ⓒ Other options

	Description	Applications	Remarks		
Blank	5-conductor cable 0.5 mm² (with output lead wire)	-	-	●	●
T	3-conductor cable 0.75 mm² (without signal output)	When output lead wire is not required	3-conductor cabtyre cable used	●	●
B	With round terminal box (5 terminals)	When the lead wires are different in length	-	●	●
L	Round terminal box with lamp (Lit when open, 3 terminals)	Fully open confirmation by lamp	Lit only when fully open	●	●
R	Round terminal box with lamp (Lit when closed, 3 terminals)	Fully closed confirmation by lamp	Lit only when fully closed	●	●

Ⓓ Manual override			
Blank	None	●	●
M	Manual override	●	●
Ⓔ Voltage			
1	100 VAC(50/60 Hz)	●	●
2	200 VAC(50/60 Hz)	●	●
3	24 VDC	●	●
4	12 VDC	●	●

*1 : When selecting both without signal output (Item Ⓒ T) and round terminal box (Item Ⓒ B) as options, designate Item Ⓒ as TB. A 3-terminal round terminal box will be provided.
*2 : Combination of Item Ⓒ LR/TL/TR/BL/BR is not available.
*3 : When the manual override (Item Ⓓ M) is selected, available port sizes are 32, 40 and 50 for MXB1. For MXB1F, available port sizes are 25, 32 and 40. Manual override is provided as standard with other port size.
*4 : When port size is 10, the valve is full bore but the model No. is MXB1.

[Example of model No.]

MXB1F-32-0TM-1

Model: MXB1F (full bore)

Ⓐ Port size : Rc1 1/4
Ⓑ Body/seat material : Body - bronze/seat - PTFE
Ⓒ Other options : 3-conductor cable (without output lead wire)
Ⓓ Manual override : Selected
Ⓔ Voltage : 100 VAC (50/60 Hz)

Internal structure and parts list

● MXB1/MXB1F

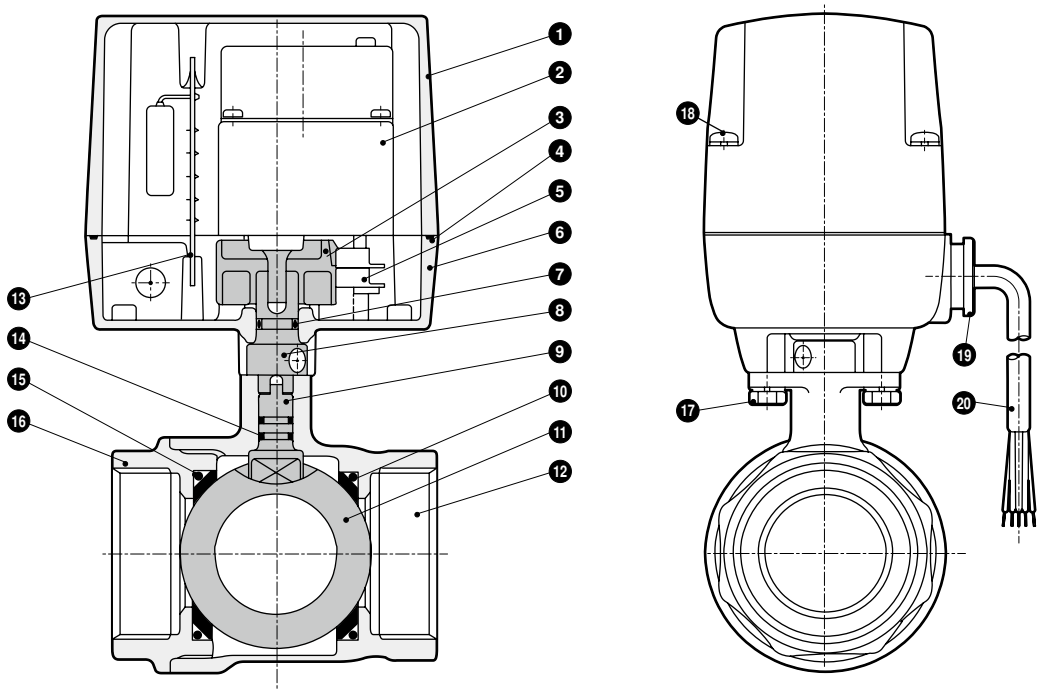

No.	Part name	Material		No.	Part name	Material	
1	Bonnet	ADC12	Aluminum die-casting	11	Valve ball	C3771(SUS304)	Copper alloy *2 (stainless steel)
2	Geared motor	-	-	12	Body	CAC408/CAC407 (SCS13)	Bronze casting (stainless steel casting)
3	Cam	PA	Polyamide resin	13	P plate assembly	PF	Phenolic resin
4	Gasket	NBR	Nitrile rubber	14	O-ring *1	FKM/NBR	Fluoro rubber/nitrile rubber
5	Micro switch	-	-	15	O-ring	FKM	Fluoro rubber
6	Adaptor	ZDC2	Zinc alloy die-casting	16	Cap	CAC408/CAC407 (SCS13)	Bronze casting (stainless steel casting)
7	O-ring	NBR	Nitrile rubber	17	Hexagon head bolt	SWRM	Carbon steel wire for cold rolling
8	Intermediate bush	SUS303	Stainless steel	18	Phillips pan head machine screw	SWRM	Carbon steel wire for cold rolling
9	Shaft	SUS303(SUS304)	Stainless steel (stainless steel)	19	Bushing	PF	Phenolic resin
10	Ball seat	PTFE	Tetrafluoroethylene resin	20	Cabtyre cable	0.5 mm^2, 5-conductor	-

Materials shown in ( ) are for stainless steel body.

*1 : The upper O-ring is NBR, and the lower is FKM. For stainless steel body, FKM is used for both upper and lower O rings.

*2 : Valve ball is hard chrome plated copper alloy.

Dimensions

● MXB1-10/15/20/25-*
● MXB1F-15/20-*

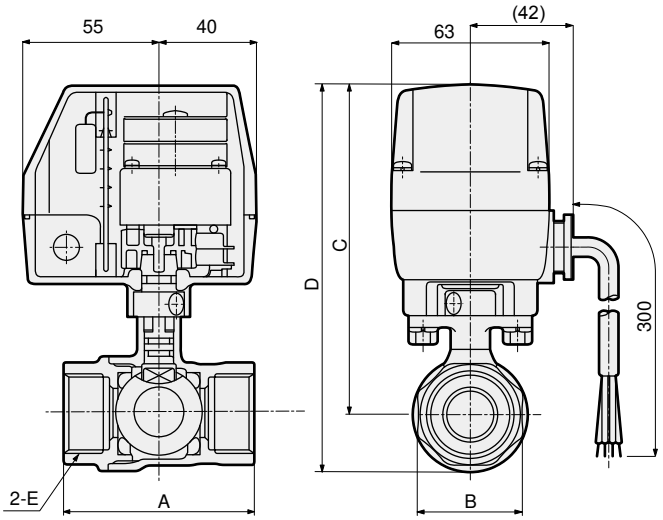

Cabtyre cable length 300 mm

Model No.	A	B	C	D	E
MXB1-10-*	50(56)	24(28)	124.5	139.5(140.5)	Rc3/8
MXB1-15-*	56	28	124.5	139.5(140.5)	Rc1/2
MXB1-20-*	65	34	130.5	150(151)	Rc3/4
MXB1-25-*	76	41	133.5	156.5(157.5)	Rc1
MXB1F-15-*	65	28	130.5	150	Rc1/2
MXB1F-20-*	71	34	133.5	156.5	Rc3/4

*1 : Dimensions shown in ( ) are for stainless steel body.

● MXB1-32/40/50-*
● MXB1F-25/32/40-*

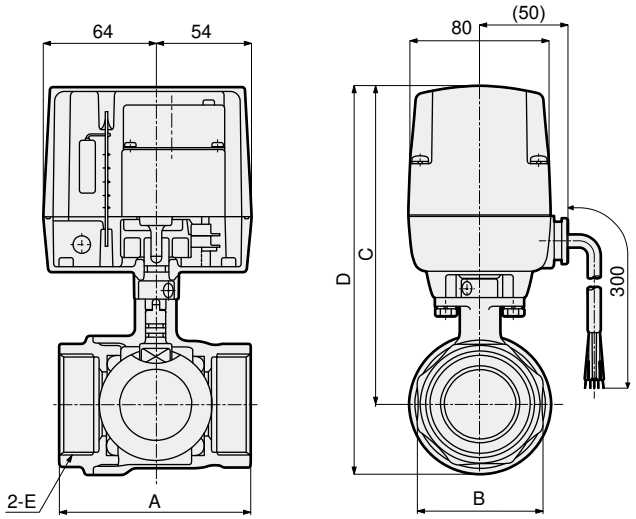

Cabtyre cable length 300 mm

Model No.	A	B	C	D	E
MXB1-32-*	84	50	166	193.5(195.5)	Rc1¼
MXB1-40-*	94	57	172	205.5(207.5)	Rc1½
MXB1-50-*	108	70	181	220.5(221.5)	Rc2
MXB1F-25-*	84	41	166	193.5	Rc1
MXB1F-32-*	95	50	172	205.5	Rc1¼
MXB1F-40-*	107	57	181	220.5	Rc1½

*1 : For valves with manual override “M”, the MSB1 Series yoke is inserted between the valve body and actuator, making dimensions C and D 22 mm longer.
*2 : Dimensions shown in ( ) are for stainless steel body.

Optional dimensions

● With round terminal box
MXB1/MXB1F- bore size -* B

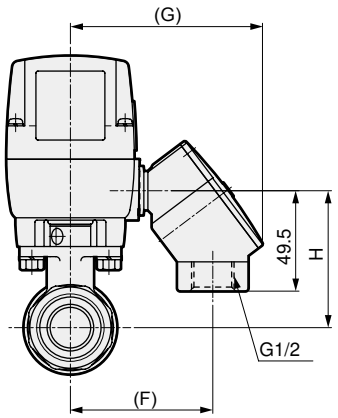

Bore size		F	G	H
MXB1	MXB1F			
10	-	74	98	58.5
15	-	74	98	58.5
20	15	74	98	64.5
25	20	74	98	67.5
32	25	82	106	77.5 (*1)
40	32	82	106	83.5 (*1)
50	40	82	106	92.5 (*1)

● Round terminal box with lamp
MXB1/MXB1F- bore size -* L R

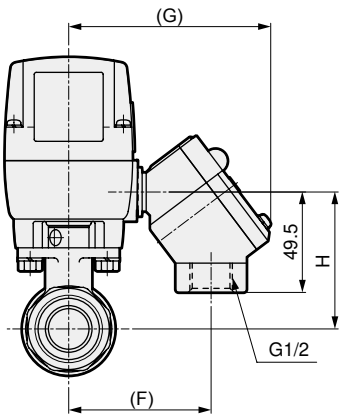

Bore size		F	G	H
MXB1	MXB1F			
10	-	74	102	58.5
15	-	74	102	58.5
20	15	74	102	64.5
25	20	74	102	67.5
32	25	82	110	77.5 (*1)
40	32	82	110	83.5 (*1)
50	40	82	110	92.5 (*1)

*1 : For valves with manual override “M”, the MSB1 Series yoke is inserted between the valve body and actuator, making dimensions 22 mm longer.