

Check valve (nozzle)

CCN Series

● Working pressure: 0.05 to 1.0 MPa

Specifications

Item		CCN	
		Standard	Series for food processing
Working fluid		Coolant, water and other non-corrosive fluids (*1)	Coolant/water/other non-corrosive liquids (*1)
Fluid viscosity	mm^2/s	500 or less	
Max. working pressure	MPa	1.0	
Proof pressure (water)	MPa	2.0	
Fluid temperature	°C	−10 to 60 (no freezing)	−10 to 60 (no freezing) During 130°C steam sterilization for 20 mins or less
Ambient temperature	°C	−10 to 60	
Cracking pressure	kPa	25 (reference value) (*2)	
Closing pressure	kPa	10 (water head: 1 m)	
Mounting orientation		Unrestricted (*3)	

*1: Liquid that does not affect stainless steel (chrome plating) or fluoro rubber.
*2: Cracking pressure refers to the pressure at which a flow of 5 mL/min (AIR) is found.
The value may increase depending on the type and viscosity of the liquid. When the valve is used for the first time after being unused for long periods, the initial cracking pressure may be higher than normal.
*3: The nozzle can be adjusted up to 30°. (OUT side port size: when 4, 5, or 6 is selected)

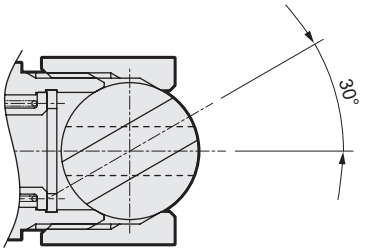

Individual specifications

Item / Model No.	IN side port size	Weight (kg)	Orifice diameter (mm)
CCN-08	R1/4, G1/4, 1/4NPT	0.05	5
CCN-10	R3/8, G3/8, 3/8NPT	0.06	6

Flow characteristics

●CCN-08*-4

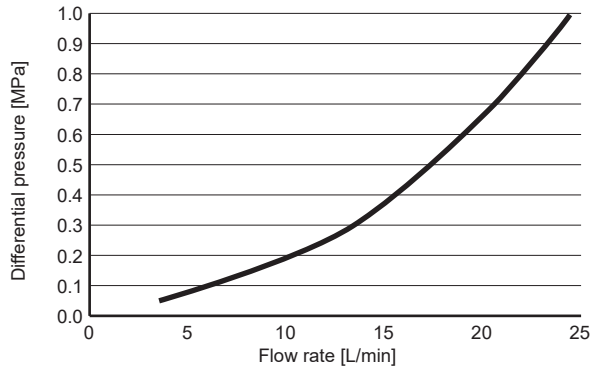

●CCN-08*-5

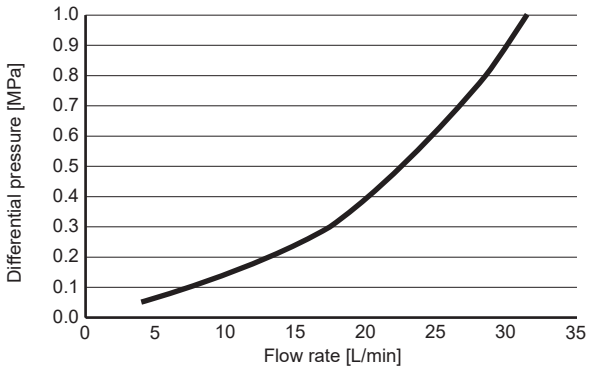

●CCN-10*-5

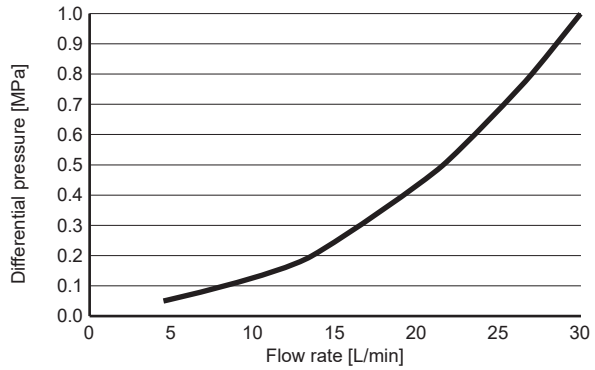

●CCN-10*-6

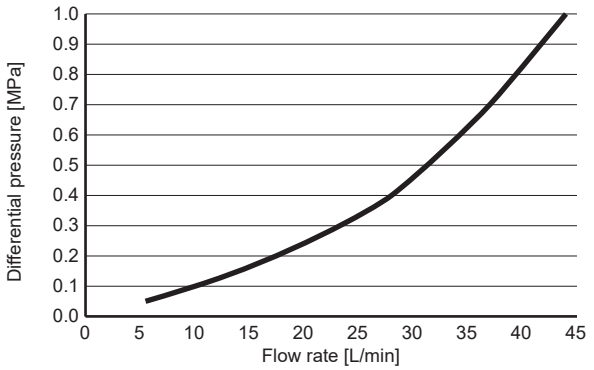

* Reference value according to CKD test conditions. Note that the flow characteristics may differ depending on the piping conditions.

How to order

CCN - 08F - 4 - ( )

Ⓐ IN side port size

Ⓑ OUT side port size

Ⓒ Series

Code	Content
Ⓐ IN side port size	
08F	R1/4
10F	R3/8
08G	G1/4 (male thread)
10G	G3/8 (male thread)
08H	1/4NPT (male thread)
10H	3/8NPT (male thread)

ⒷOUT side port size

		08F	10F	08G	10G	08H	10H
4	ø4	●		●		●	
5	ø5	●	●	●	●	●	●
6	ø6		●		●		●
A	Rc1/4	●	●				
B	R1/4	●	●				
C	G1/4 (female thread)			●	●		
D	G1/4 (male thread)			●	●		
E	1/4NPT (female thread)					●	●
F	1/4NPT (male thread)					●	●

Ⓒ Series	
Blank	Standard
FP2	Series for food processing

Internal structure and parts list

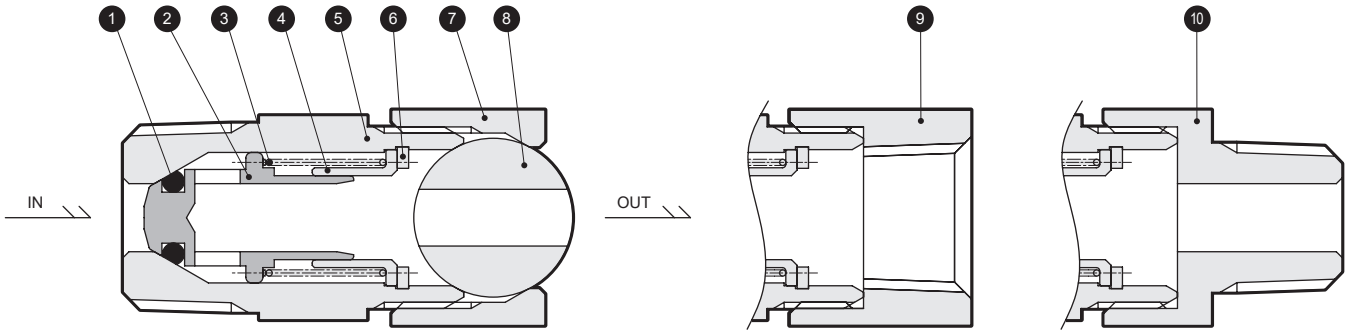

No.	Part name	Material	
1	O-ring	FKM	Fluoro rubber
2	Main Valve body	SUS303	Stainless steel (chrome plating)
3	Spring	SUS304	Stainless steel
4	Valve holder	SUS303	Stainless steel
5	Body	SUS303	Stainless steel
6	C-snap ring	SUS304	Stainless steel
7	Cover	SUS303	Stainless steel
8	Nozzle	SUS303	Stainless steel
9	Cover (female thread)	SUS303	Stainless steel
10	Cover (male thread)	SUS303	Stainless steel

Dimensions

● CCN-08F/08H/10F/10H-4/5/6

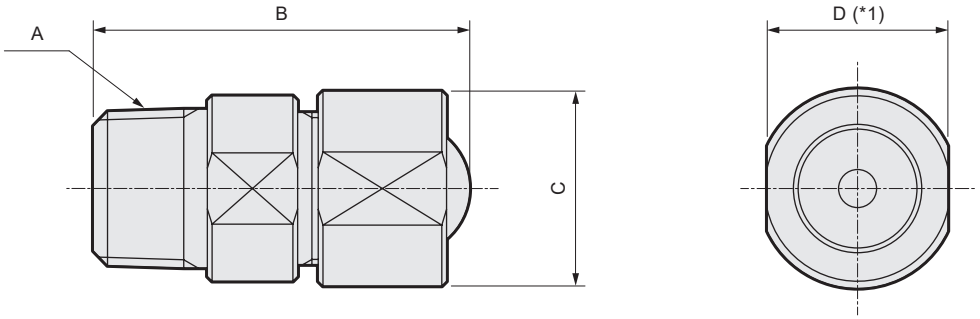

Model No.	A	B	C	D (*1)
CCN-08F-4/5	R1/4	36.5	ø20.5	17
CCN-10F-5/6	R3/8	39.5	ø20.5	18
CCN-08H-4/5	1/4NPT (male thread)	37.5	ø20.5	17
CCN-10H-5/6	3/8NPT (male thread)	41	ø20.5	18

*1: The body side dimensions are tang dimensions.

● CCN-08F/08H/10F/10H-A/E

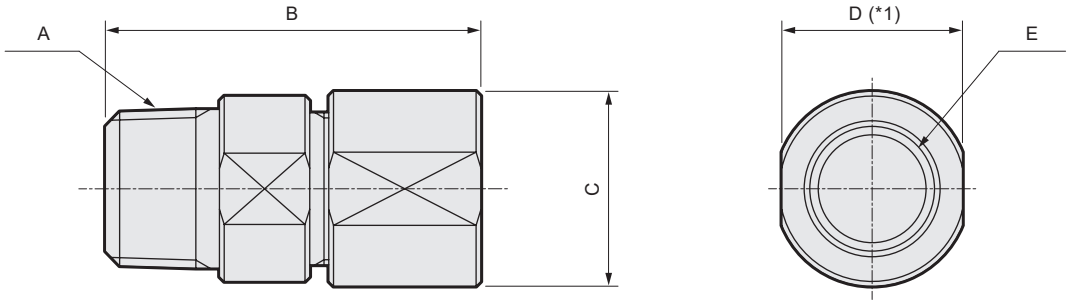

Model No.	A	B	C	D (*1)	E
CCN-08F-A	R1/4	36.5	ø20.5	17	Rc1/4
CCN-10F-A	R3/8	39.5	ø20.5	18	Rc1/4
CCN-08H-E	1/4NPT (male thread)	39	ø20.5	17	1/4NPT (female thread)
CCN-10H-E	3/8NPT (male thread)	42.5	ø20.5	18	1/4NPT (female thread)

*1: The body side dimensions are tang dimensions.

● CCN-08F/08H/10F/10H-B/F

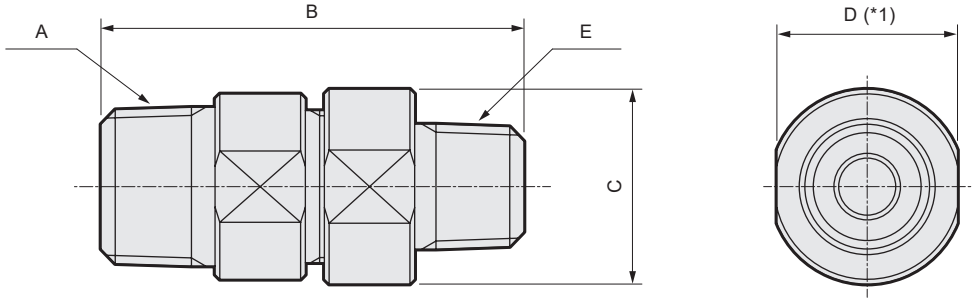

Model No.	A	B	C	D (*1)	E
CCN-08F-B	R1/4	41.5	ø20.5	17	R1/4
CCN-10F-B	R3/8	44.5	ø20.5	18	R1/4
CCN-08H-F	1/4NPT (male thread)	43.5	ø20.5	17	1/4NPT (male thread)
CCN-10H-F	3/8NPT (male thread)	47	ø20.5	18	1/4NPT (male thread)

*1: The body side dimensions are tang dimensions.

Dimensions

● CCN-08G/10G-4/5/6

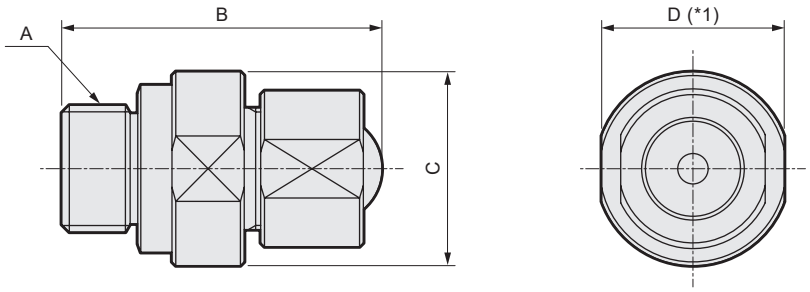

Model No.	A	B	C	D (*1)
CCN-08G-4/5	G1/4 (male thread)	40	ø20.5	19
CCN-10G-5/6	G3/8 (male thread)	42	ø25.5	24

*1: The body side dimensions are tang dimensions.

● CCN-08G/10G-C

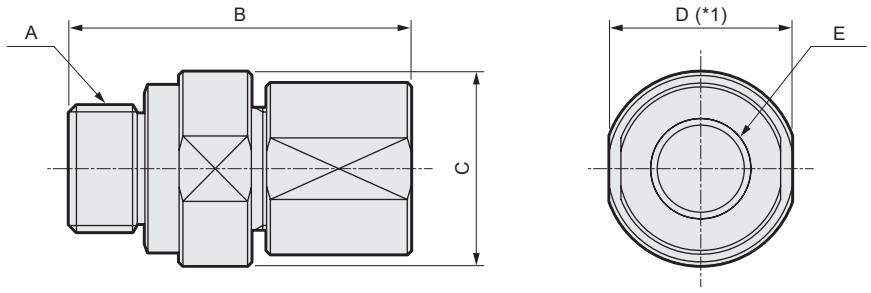

Model No.	A	B	C	D (*1)	E
CCN-08G-C	G1/4 (male thread)	43	ø20.5	19	G1/4 (female thread)
CCN-10G-C	G3/8 (male thread)	45	ø25.5	24	G1/4 (female thread)

*1: The body side dimensions are tang dimensions.

● CCN-08G/10G-D

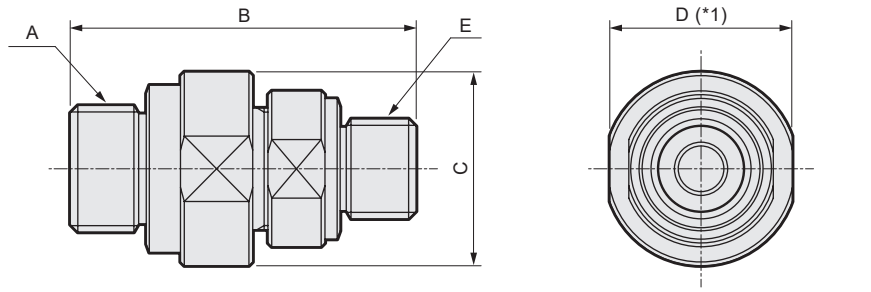

Model No.	A	B	C	D (*1)	E
CCN-08G-D	G1/4 (male thread)	43.5	ø20.5	19	G1/4 (male thread)
CCN-10G-D	G3/8 (male thread)	45.5	ø25.5	24	G1/4 (male thread)

*1: The body side dimensions are tang dimensions.

[G screw recommended female screw dimension]

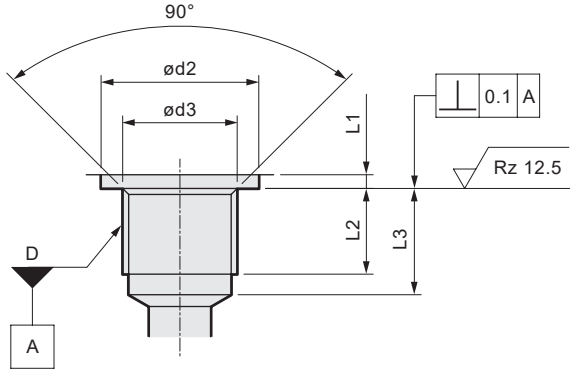

Thread nominal D	d2 (min.)	d3		L1 (max.)	L2 (min.)	L3 (min.)
		Reference	Tolerance			
G1/4	20	13.2	+0.2 0	1.5	12.5	15.5
G3/8	23	16.7		2		