

Pilot operated 2-port valve for dust collector
(Large port size dust collector)

PD3/PDV3-20A/25A/40A Series

- Air operated/with solenoid valve
- Port size: Rc3/4, Rc1, IN: Rc1 1/2-OUT: ø48, Rc1 1/2

RoHS CAD

JIS symbol

● PD3 (Air operated)

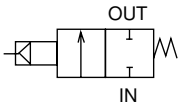

● PDV3 (With solenoid valve)

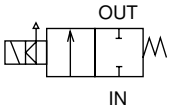

Common specifications

Item		Air operated	With solenoid valve
		PD3	PDV3
Working fluid		Air (no corrosive gas)	
Min. working pressure differential MPa		0.1 (≈15 psi, 1 bar)	
Max. working pressure differential MPa		0.7 (≈100 psi, 7 bar)	
Max. working pressure MPa		0.7 (≈100 psi, 7 bar)	
Proof pressure (water pressure) MPa		2.0 (≈290 psi, 20 bar)	
Fluid temperature °C		-10 (14°F) to 60 (140°F), -10 (14°F) to 100 (212°F) for fluoro rubber seal (no freezing)	
Ambient temperature °C		-10 (14°F) to 60 (140°F), -10 (14°F) to 100 (212°F) for fluoro rubber seal	
Atmosphere		Place free of corrosive gas and explosive gas	
Valve structure		Pilot operated poppet structure	
Valve seat leakage cm^3/min		300 or less, urethane rubber used for sealant material: 50 or less	
Pilot port size		Rc1/8	
Mounting orientation		Unrestricted	
Working environment		Indoors/outdoors	Indoors
Electrical specifications		**PDV3**	
Rated voltage		100 VAC (50/60 Hz)/110 VAC (60 Hz), 200 VAC (50/60 Hz)/220 VAC (60 Hz), 12 VDC, 24 VDC	
Voltage fluctuation range		-10 to +10% of rated voltage	
Apparent power (VA)	Holding	7.5(50 Hz), 5.5(60 Hz)	
	Starting	20(50 Hz), 17(60 Hz)	
Power consumption (W)	AC	4.0(50 Hz), 3.4(60 Hz)	
	DC	6.5	
Thermal class		Class 130 (B) (coil option 4A: Class 180 (H) or equivalent)	
Degree of protection		IP65 or equivalent (*1)	

*1 : The T type terminal box is IP61 or equivalent.

Individual specifications

Item / Model No.	Port size	Orifice size (mm)	Cv	Weight (kg)
● Air operated				
PD3-20A	Rc3/4	23	11	0.26
PD3-25A	Rc1	28	18	0.40
PD3-40A	IN:Rc1 1/2 - OUT: O.D. ø48 Length 52	37	45	0.86
PD3-40A-RC	Rc1 1/2	37	45	0.75
● With solenoid valve				
PDV3-20A	Rc3/4	23	11	0.41
PDV3-25A	Rc1	28	18	0.55
PDV3-40A	IN:Rc1 1/2 - OUT: O.D. ø48 Length 52	37	45	1.01
PDV3-40A-RC	Rc1 1/2	37	45	0.90

*1 : For a solenoid valve for driving the air operated PD3, use FAB31-6-3 (page 52), AB31-01-3 (page 154), AB41E4-02-3-03T (explosion proof, page 424) or PJVB (page 842).
*2 : The combination of PD3 and PJVB is recommended for outdoor use.
*3 : Contact CKD when using as a dust collector for ash treatment or combustion gas at a waste incinerator.

How to order

● Air operated

PD3 - 20A - N

● With solenoid valve

PDV3 - 20A - N 2C - AC100V

Model No.

Ⓐ Port size *2

Ⓑ Sealant *2 *3 *4

Ⓒ Coil option *4 *5

Ⓓ Voltage *5 *6

Code	Description	Model No. PD3	Model No. PDV3
Ⓐ Port size			
20A	Rc3/4	●	●
25A	Rc1	●	●
40A	IN: Rc1 1/2, OUT: O.D. ø48, length 52	●	●
40A-RC	Rc1 1/2	●	●
Ⓑ Sealant			
Blank	Urethane rubber	●	●
N	Nitrile rubber	●	●
F	Fluoro rubber	●	●
Ⓒ Coil option			
2C	Std. Grommet lead wire		●
2CS	Option Grommet lead wire with surge suppressor		●
2E	Option With DIN terminal box (G1/2)		●
2ES	Option With DIN terminal box/surge suppressor (G1/2)		●
2G	Option With DIN terminal box (Pg11)		●
2H	Option DIN terminal box/with lamp (Pg11)		●
2HS	Option DIN terminal box with lamp/surge suppressor (Pg11)		●
2CG	Option Conduit (CTC19)		●
2CH	Option Conduit (G1/2)		●
3T	Option With T type terminal box (G1/2)		●
3R	Option T type terminal box with lamp (G1/2)		●
3RS	Option T type terminal box with lamp/surge suppressor (G1/2)		●
4A	Option Grommet lead wire (thermal class H or equivalent)		●
Ⓓ Voltage			
AC100V	100 VAC(50/60 Hz)/110 VAC(60 Hz)		●
AC200V	200 VAC(50/60 Hz)/220 VAC(60 Hz)		●
DC24V	24 VDC		●
DC12V	12 VDC		●

*1 : The combinations indicated with ● above are available.
*2 : Item Ⓑ Blank (sealant material: urethane rubber) is not available when port size is 40A or 40A-RC.
*3 : When Item Ⓑ is N or F (sealant material: nitrile rubber or fluoro rubber), the main valve material is nylon resin.
*4 : For PDV3 Series, when Item Ⓑ is F (sealant material: fluoro rubber), only 4A is available for Item Ⓒ (coil option).
*5 : When Item Ⓒ (coil option) is 4A, only AC voltage is available.
*6 : For voltages other than above, contact CKD.

[Example of model No.]

PDV3-20A-2C-AC100V

Model : PDV3

Ⓐ Port size : Rc3/4
Ⓑ Sealant : Urethane rubber
Ⓒ Coil option : Grommet lead wire
Ⓓ Voltage : 100 VAC(50/60 Hz)/110 VAC(60 Hz)

Internal structure and parts list: Air operated

● Sealant material: Urethane rubber
PD3-20A/25A

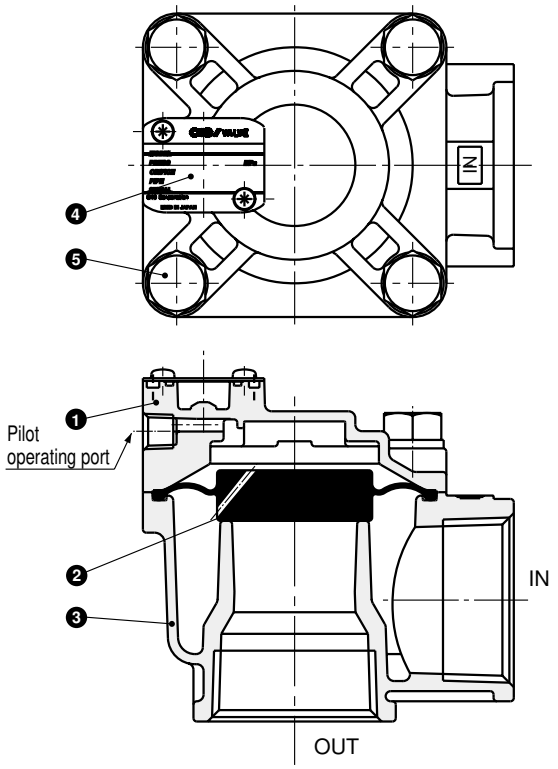

● Sealant material: Nitrile rubber/fluoro rubber
PD3-20A/25A/40A-[N][F] *1
PD3-40A-RC-[N][F]

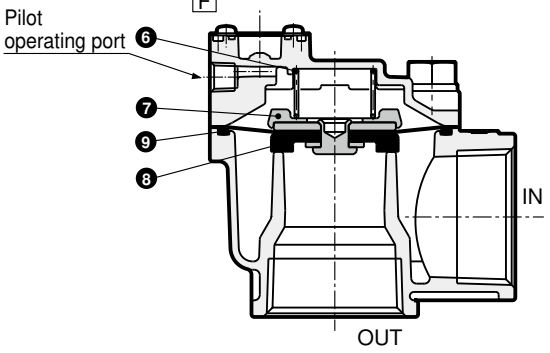

*1 : The shape of 40A body is different from the figure above.

No.	Part name	Material	
1	Cover	ADC12	Aluminum die-casting
2	Diaphragm	U	Urethane rubber
3	Body	ADC12	Aluminum die-casting
4	Nameplate	A1200P	Aluminum
5	Hexagon head bolt	SUSXM7	Stainless steel
6	Spring	SUS304	Stainless steel
7	Spacer	PA	Nylon resin
8	Diaphragm assembly	SUS304, PA	Stainless steel, nylon resin
		NBR or FKM	Nitrile rubber or fluoro rubber
9	O-ring	NBR or FKM	Nitrile rubber or fluoro rubber

Internal structure and parts list: With solenoid valve

● Sealant material: Urethane rubber
PDV3-20A/25A-2C (Grommet lead wire)

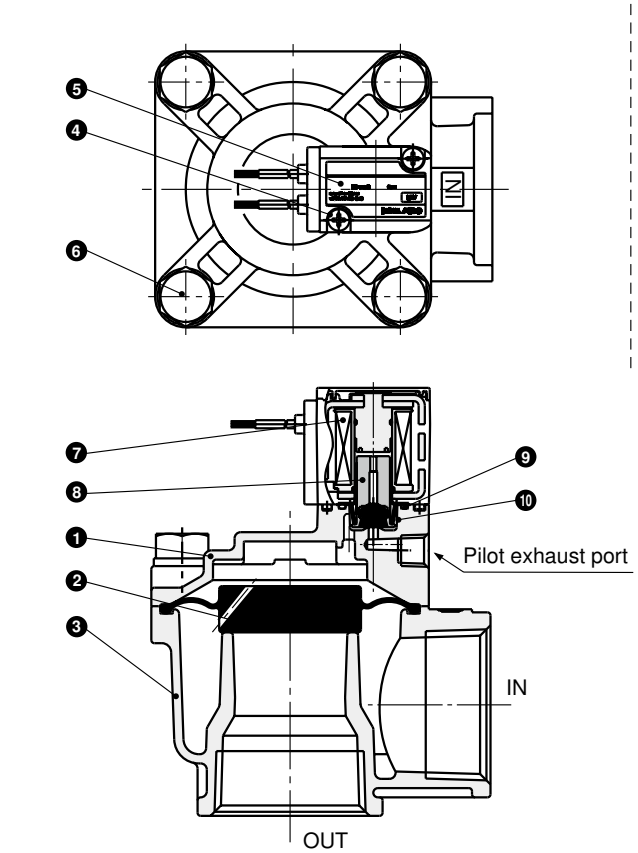

● Sealant material: Nitrile rubber/fluoro rubber
PDV3-20A/25A/40A-[N2C] *1
PDV3-40A-RC-[N2C][F4A]
[F4A]

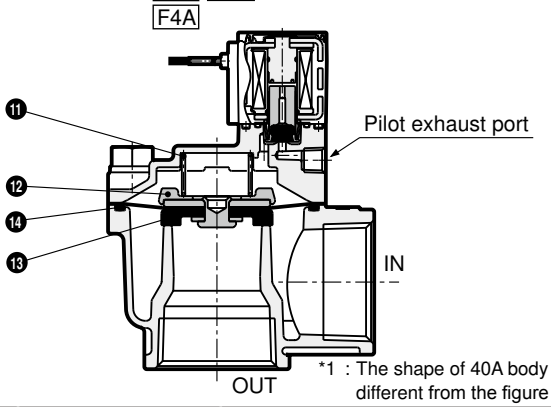

*1 : The shape of 40A body is different from the figure above.

No.	Part name	Material	
1	Cover	ADC12	Aluminum die-casting
2	Diaphragm	U	Urethane rubber
3	Body	ADC12	Aluminum die-casting
4	Phillips pan head machine screw, captive spring washer	SWRM	Carbon steel wire for cold rolling
5	Nameplate	PET	Polyethylene terephthalate
6	Hexagon head bolt	SUSXM7	Stainless steel
7	Coil assembly	Class B molded coil	
8	Plunger assembly	K-M31, NBR or FKM	Stainless steel/nitrile rubber or fluoro rubber
9	O-ring	NBR or FKM	Nitrile rubber or fluoro rubber
10	Plunger spring	SUS304	Stainless steel
11	Spring	SUS304	Stainless steel
12	Spacer	PA	Nylon resin
13	Diaphragm assembly	SUS304, PA	Stainless steel, nylon resin
		NBR or FKM	Nitrile rubber or fluoro rubber
14	O-ring	NBR or FKM	Nitrile rubber or fluoro rubber

Dimensions: PD3 Series

● Air operated
PD3-20A/25A
PD3-40A-RC

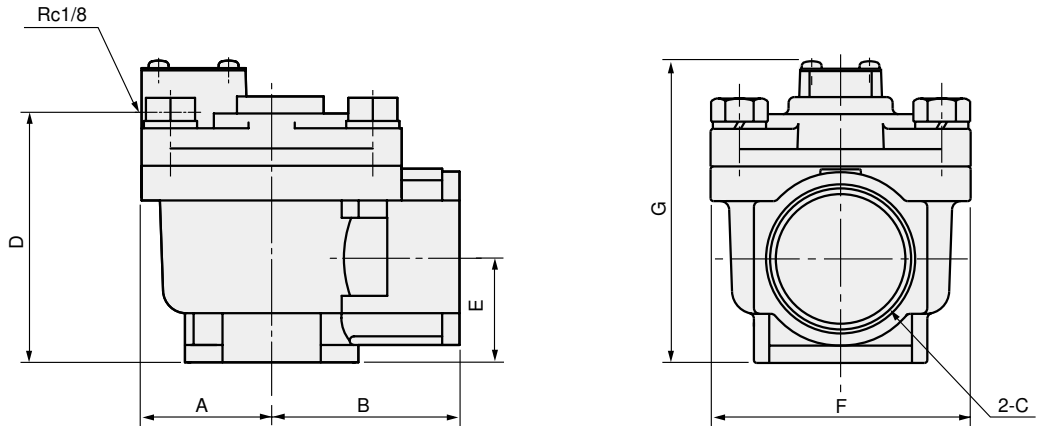

Model No.	A	B	C	D	E	F	G
PD3-20A	31.5	40	Rc3/4	64	31	60	83
PD3-25A	37.5	45	Rc1	76	39	71	95
PD3-40A-RC	45	65	Rc1 1/2	86	36	90	105

● Air operated
PD3-40A

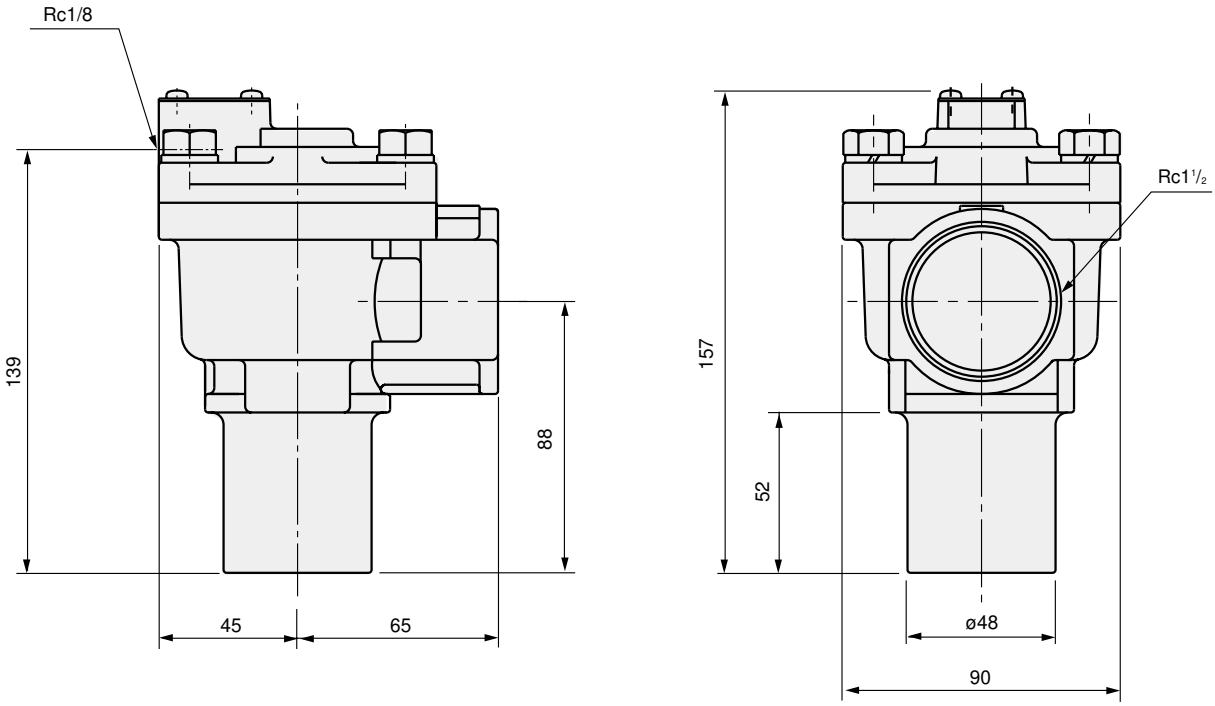

Dimensions: PDV3 Series

● Grommet lead wire with solenoid valve
PDV3-20A/25A-2C
PDV3-40A-RC

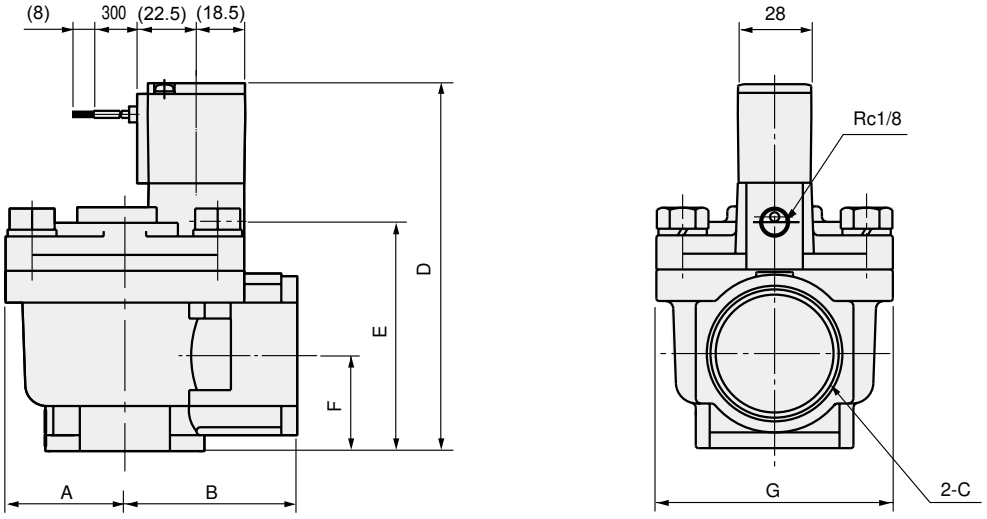

Model No.	A	B	C	D	E	F	G
PDV3-20A	31.5	40	Rc3/4	117	64	31	60
PDV3-25A	37.5	45	Rc1	129	76	39	71
PDV3-40A-RC	45	65	Rc1 1/2	140	87	36	90

● Grommet lead wire with solenoid valve
PDV3-40A-2C

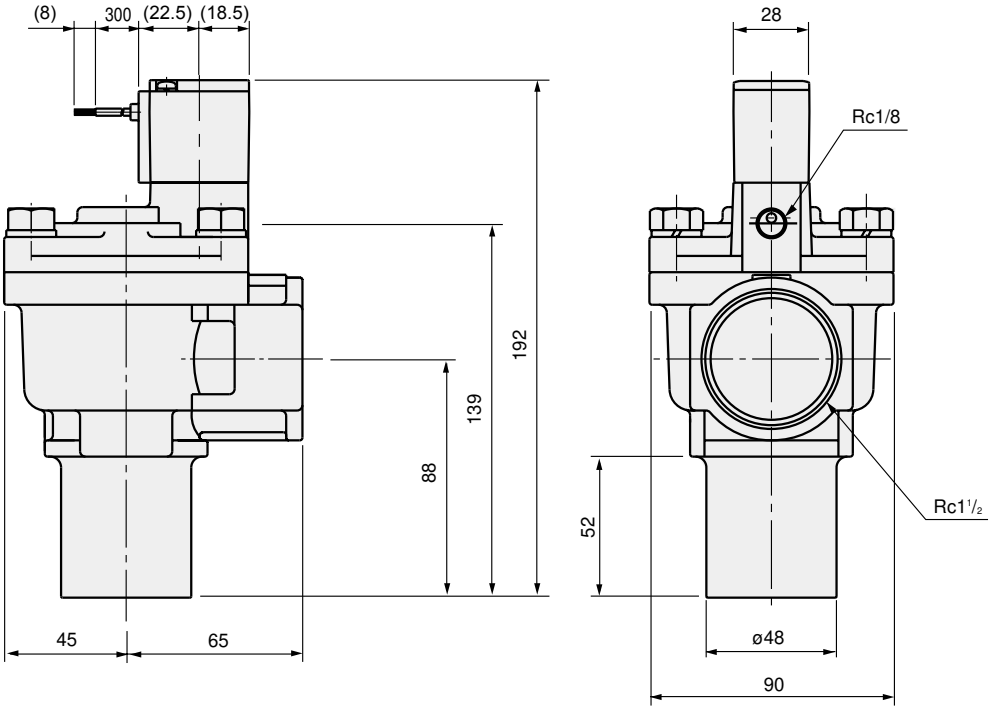

Optional dimensions

● DIN terminal box (with lamp/surge suppressor)
DIN terminal box with lamp
PDV3-*- 2E/2ES
2G
2H/2HS

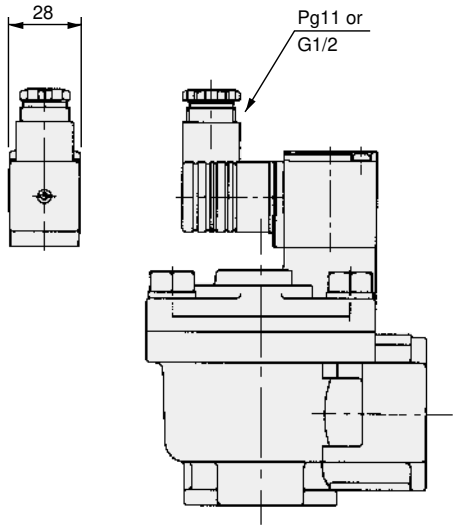

● Conduit (CTC19 / G1/2)
PDV3-*- 2CG
2CH

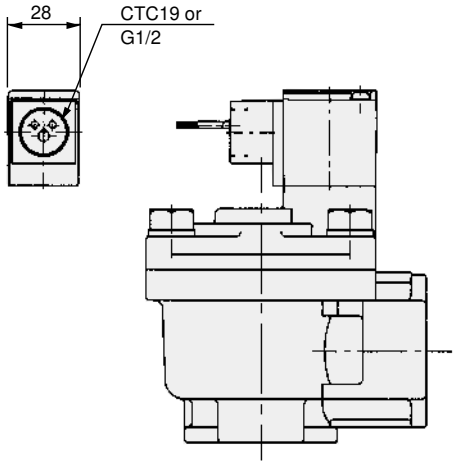

● T type terminal box (G1/2) (with lamp/surge suppressor)
T type terminal box with lamp (G1/2)
PDV3-*- 3T
3R
3RS

