

Sequential fluid control components for large port size dust collector valve
(Controller for large port size dust collector valve)

OMC2 Series

● Step No.: 6, 10

RoHS

Specifications

Item		OMC2-6	OMC2-10
Number of output steps		6	10
Power supply voltage V		100 to 220 AC ±10% (50/60 Hz) *1	
Power consumption VA		5 or less (controller only)	
Power supply fuse		3A 250V	
Operating ambient temperature °C		-10 (14°F) to 60 (140°F)	
Operating ambient humidity % RH		80 or less	
Storage ambient temperature °C		-20 (-4°F) to 70 (158°F)	
Pulse ON time setting range		(01 to 99) × (0.01 sec. or 0.1 sec. or 1 sec. or 10 sec.)	
Pulse OFF time setting range		(01 to 99) × (1 sec. or 10 sec.)	
Set time accuracy		Set time ± 5% + max. 1/2 cycle (commercial frequency)	
Operation mode	Independent	Continuous run mode with a single unit	
	Linked	Serial connection interlock mode between master unit and slave unit	
Pulse repetition rate		Single- or double-striking (double-striking is not possible when interval time is set)	
Stop		Immediate stop or cycle stop (select either one.)	
Interval time		1 to 99 min. (enabled only when single-striking is set)	
Insulation resistance		10 MΩ or more (500 VDC)	
Withstand voltage		No failure after 1 minute of 1,500 VAC application	
Output circuit leakage current		1 mA or less at 100 VAC, 1.3 mA or less at 200 VAC, 1.4 mA or less at 220 VAC	
Weight kg		0.3	

*1 : The voltage of the connected valve must match the power supply voltage.

How to order

OMC2 - 6

Model No.

Ⓐ Step No.

Code	Description
Ⓐ Step No.	
6	6 steps
10	10 steps

[Example of model No.]

OMC2-6

Model : OMC2

Ⓐ Step No. : 6

⚠ Note on solenoid valve model No. selection

OMC2 can be used with the solenoid valve PDV3, PDV2, PJVB or PDVE4. Select a solenoid valve with a rated voltage matching the system's power supply voltage. If the OMC2 power supply voltage is 100 VAC, select the solenoid valve for 100 VAC. If the OMC2 power supply voltage is 200 VAC, select the solenoid valve for 200 VAC.

Dimensions

● OMC2-6/10

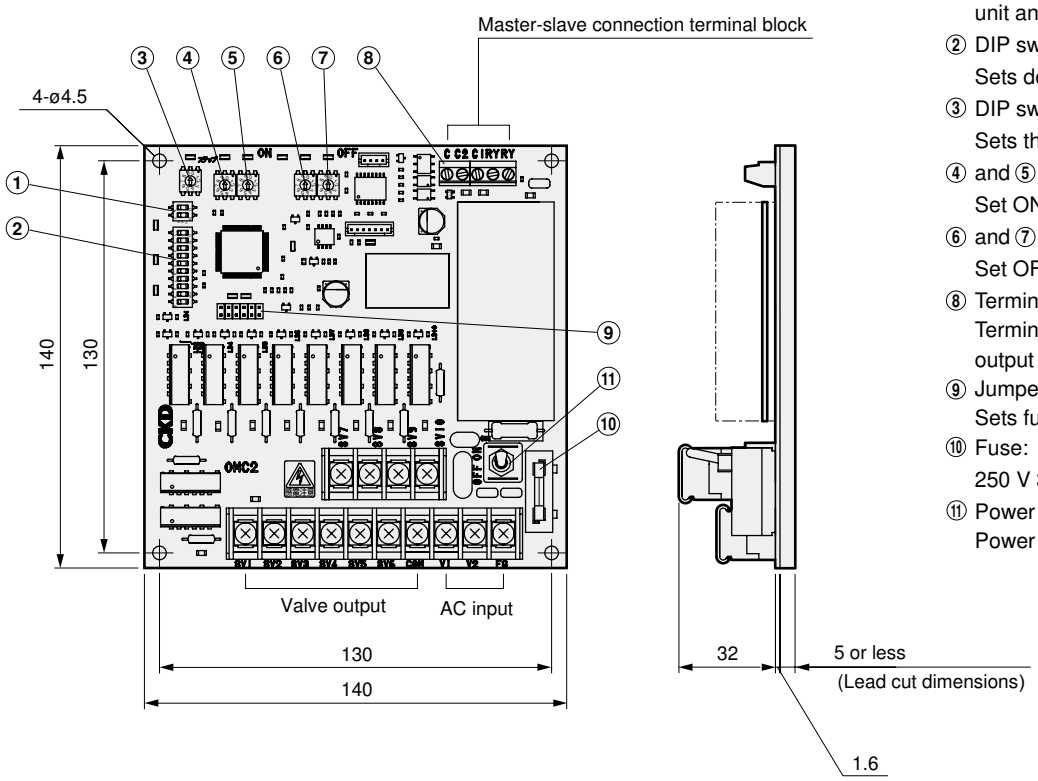

● Switches

① DIP switch:
Sets switching of single unit, master unit and slave unit.
② DIP switch:
Sets double-striking or interval timer.
③ DIP switch:
Sets the number of steps.
④ and ⑤ DIP switches:
Set ON time.
⑥ and ⑦ DIP switches:
Set OFF time.
⑧ Terminal block:
Terminal block for external sequence output terminal and stop input terminal.
⑨ Jumper:
Sets functions.
⑩ Fuse:
250 V 3 A
⑪ Power supply switch:
Power supply switch

Wiring diagram

● Controller wiring diagram with more than 10 steps

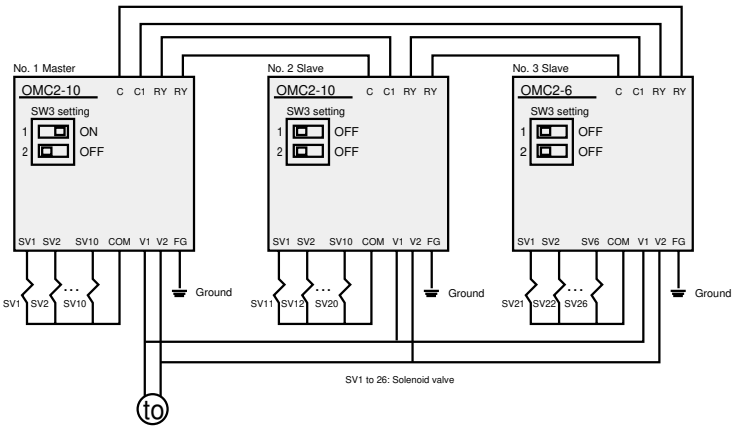

● Time setting
Pulse ON and OFF times can be separately set as shown below.

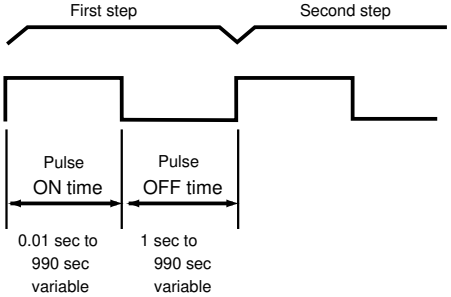

Pulse ON and OFF times after the second step are the same as those of the first step.