

For double cutoff compliant with low pressure (5 kPa) to intermediate pressure (45 kPa) specifications.
Equivalent to "DIN3394" groups A and B

Gas cutoff valve (quick open) VNA Series

- NC (Open when energized)
- City gas/LPG
- Port size: Rp1/2, Rp3/4, Rp1, Rp1 1/4, Rp1 1/2, Rp2, Rp2 1/2

RoHS

Features

- Japan Gas Component Inspection Association (JIA) type certified product (Applicable models: VNA-32-AC100V, AC200V, VNA-40-AC100V, AC200V, VNA-50-AC100V, AC200V. *Optional products, Other bore sizes are not compliant.)
- For a wide range of gas pressures ranging from low pressure to intermediate pressure.
- Flow rate adjustment (calorie change) is easy, adjustable even after installation.
- Equipped with a robust dedicated terminal box with JIS standard conduit thread, making electrical wiring easy too.
- The DC driven actuator with rectifier has eliminated noise and coil burnout for safety.

Applications

- Gas boilers
- Industrial furnaces
- Gas absorption water coolers/heaters
- Drying furnaces
- Hydrogen-related devices (only hydrogen gas option is used as the working fluid)
- Other

Specifications

Item	VNA-15	VNA-20	VNA-25	VNA-32	VNA-40	VNA-50	VNA-65	VNA-32-D	VNA-40-D
Working fluid	City gas/LPG (hydrogen gas *1)								
Working pressure kPa	0 to 45	0 to 30				0 to 20		0 to 5	
Flow rate (Specific gravity of city gas 0.65, △P=0.25kPa) m³/h (ANR)	6.9	14.8	18.7	30.3	34.5	70.0	112.6	45.0	49.0
Cv	4.6	9.9	12.5	20.4	23.2	47.1	75.8	30.3	33.0
Rated voltage V	100 AC +10% -15% 200 AC +10% -15%								
Frequency Hz	Common to 50 and 60								
Power consumption (apparent power) VA	31			50		73	74	50	
Ambient temperature °C	-20 to +60 (no freezing)								
Opening time s	0.5 or less								
Closing time s	1.0 or less								
Frequency cycles/min	30 or less								
Flow rate adjustment %	20 to 100							—	
Mounting orientation	Vertical direction with the coil on top or horizontal direction with the coil horizontal								
Connection	Screw-in (Rp)								
Port size	1/2	3/4	1	1 1/4	1 1/2	2	1 1/2	1 1/4	1 1/2
Weight kg	1.7	2.5	2.4	4.0	3.9	8.3	14.6	3.7	3.7
Proof pressure MPa	0.1								
Degree of protection	IPX4								

* 1: Only the option for hydrogen gas as the working fluid can be used.

Flow characteristics

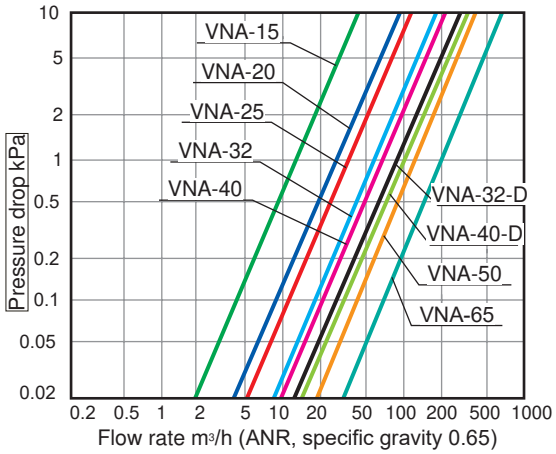

Reference: Conversion coefficient

Converted flow rate = (flow rate in table) x (coefficient)

Gas	City gas (13A)	Propane	Butane	Hydrogen gas *1
Specific gravity (air = 1)	0.65	1.6	2.0	0.07
Coefficient	1.0	0.63	0.57	3.04

How to order

VNA - 40 - D PY H2 - AC100V

- VNA: Model No.
- 40: ❶ Port size
- D: ❷ Capacity *2
- PY: ❸ Other options *3 *4 *5 *6 *7 *8
- H2: ❹ Hydrogen compatible option *9
- AC100V: ❺ Voltage *10

Code	Description	Model No. VNA-15	VNA-20	VNA-25	VNA-32	VNA-40	VNA-50	VNA-65
❶ Port size								
15	Rp1/2	●						
20	Rp3/4		●					
25	Rp1			●				
32	Rp1 1/4				●			
40	Rp1 1/2					●		
50	Rp2						●	
65	Rp2 1/2							●
❷ Capacity								
Blank	Standard	●	●	●	●	●	●	●
D	Large flow rate specifications				●	●		
❸ Other options								
Blank	Standard None	●	●	●	●	●	●	●
E	Option With operation confirmation micro switch	●	●	●	●	●	●	●
H	Option 0.1 MPa specifications	●	●	●	●	●		
L	Option With power indicator lamp	●	●	●	●	●	●	●
P	Option With pressure detection port	●	●	●	●	●	●	●
V	Option Vacuum specifications	●	●	●				
Y	Option With flow rate adjustment				●	●		
ZZ	Option Outdoor type	●	●	●	●	●	●	●
❹ Hydrogen compatible option								
Blank	Standard							
H2	Working fluid: Hydrogen gas							
❺ Voltage								
AC100V	Standard 100 VAC 50/60 Hz							
AC200V	Standard 200 VAC 50/60 Hz							
AC110V	Option 110 VAC 50/60 Hz							
AC220V	Option 220 VAC 50/60 Hz							
DC24V	Option 24 VDC							
DC100V	Option 100 VDC							

*1: The combinations indicated with ● above are available.
*2: For large flow rate specifications (❷ Capacity "D"), flow rate adjustment is not available. Combinations with flow rate adjustment (❸ Other option "Y") are available. ❷ In addition, combinations with the 0.1MPa specification (❸ Other option "H") and vacuum specification (❸ Other option "V") are not available for large flow rate specifications (❷ Capacity "D").
*3: For models with operation confirmation micro switch (❸ Other option "E"), a pressure detection port is provided as standard. Flow rate adjustment is not available. Combinations with the 0.1MPa specification (❸ Other option "H"), vacuum specification (❸ Other option "V"), and outdoor specification (❸ Other option "ZZ") are not available.
*4: For port sizes 32 and 40 with 0.1MPa specification (❸ Other option "H"), a power indicator lamp is provided as standard.
*5: Combination with the power indicator lamp (❸ Other option "L") is not available for the outdoor specification (❸ Other option "ZZ").
*6: The type with flow rate adjustment (❸ Other option "Y") is dedicated for large flow rate specifications (❷ Capacity "D"). Standard products all have flow rate adjustment equipped as standard.
*7: Combinations of the outdoor specification (❸ Other option "ZZ") with micro switch for operation check (❸ Other option "E") and with power indicator lamp (❸ Other option "L") are not available.
*8: ❸ For combinations of other optional specifications other than above, contact CKD.
*9: Working gas: Combination of vacuum specification (❸ Other option "V") is not available for hydrogen gas option.
*10: For voltages other than above, contact CKD.

Internal structure/material

● VNA-15 to 40

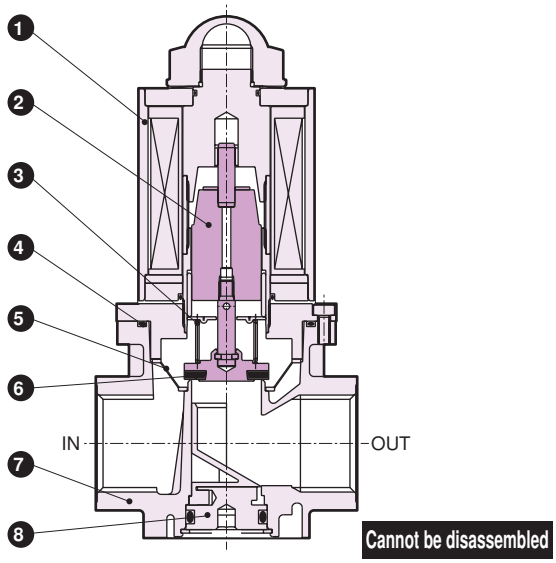

● VNA-50 to 65

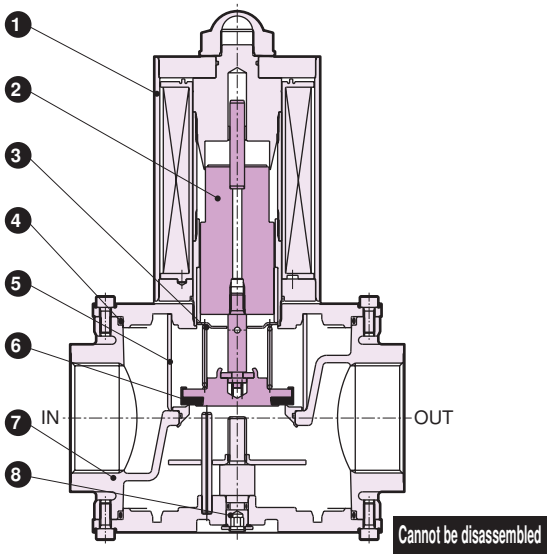

Part No.	Part name	Material	Part No.	Part name	Material
1	Bonnet	Steel	5	Strainer	Resin (15 to 50)/stainless steel wire (65)
2	Plunger	Stainless steel	6	Valve disc	Nitrile rubber
3	Spring	Stainless steel wire	7	Body	Aluminum
4	O-ring	Nitrile rubber	8	Flow rate adjusting screw	Aluminum (15 to 40)/steel (50 to 65)

Dimensions

● VNA-15 to 40

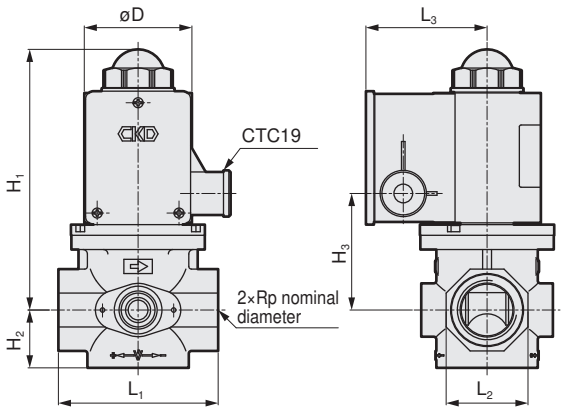

● VNA-50 to 65

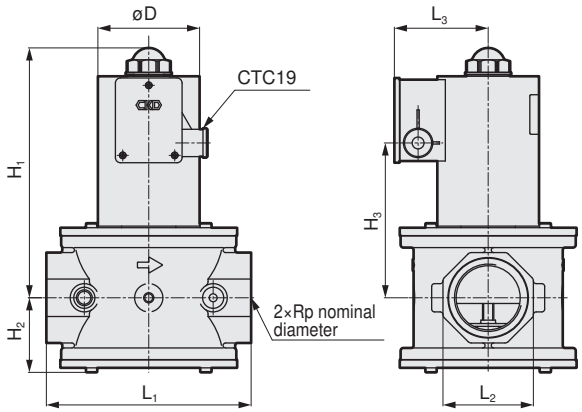

Code / Model No.	Port size	H_1	H_2	H_3	L_1	L_2	L_3	øD
VNA-15	1/2	132.5	24.5	51	69	32	63	50
VNA-20	3/4	147	33	65.5	89	46	68	60.5
VNA-25	1	147	33	65.5	89	46	68	60.5
VNA-32	1¼	166	39.5	84.5	128	65	73	70
VNA-40	1½	166	39.5	84.5	128	65	73	70
VNA-50	2	221	66.5	137	180	80	83	90
VNA-65	2½	232	77.5	148	218	95	101	127
VNA-32-D	1¼	174.5	35	93	128	70	73	70
VNA-40-D	1½	174.5	35	93	128	70	73	70

Optional dimensions

● Vacuum specifications: 1.33 × 10^{-5} to 101kPa (reverse vacuum not possible)
VNA-15/20/25-V

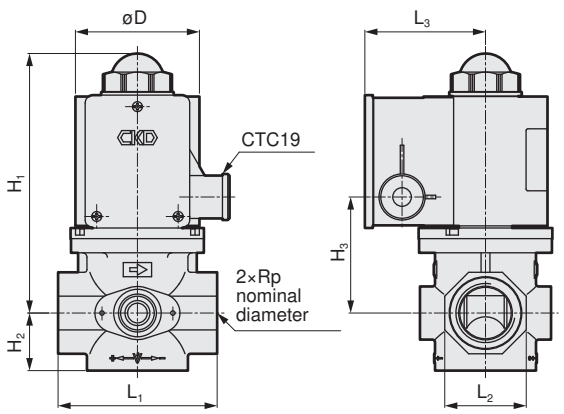

Code / Model No.	Port size	H1	H2	H3	L1	L2	L3	øD
VNA-15-V	1/2	136.5	24.5	55	69	32	68	60.5
VNA-20-V	3/4	147	33	65.5	89	46	73	70
VNA-25-V	1	147	33	65.5	89	46	73	70

● 0.1 MPa specifications
VNA-15 to 40-H

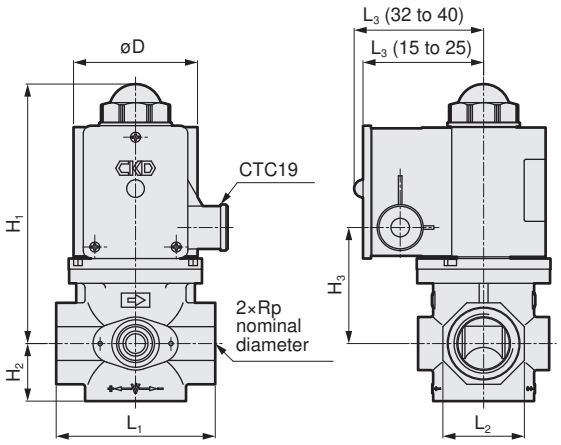

*For port sizes 32 and 40, power indicator lamp is provided as standard.

Code / Model No.	Port size	H1	H2	H3	L1	L2	L3	øD
VNA-15-H	1/2	136.5	24.5	55	69	32	68	60.5
VNA-20-H	3/4	147	33	65.5	89	46	73	70
VNA-25-H	1	147	33	65.5	89	46	73	70
VNA-32-H	1¼	193	39.5	111.5	128	65	88	90
VNA-40-H	1½	193	39.5	111.5	128	65	88	90

● With power indicator lamp
VNA-15 to 65-L

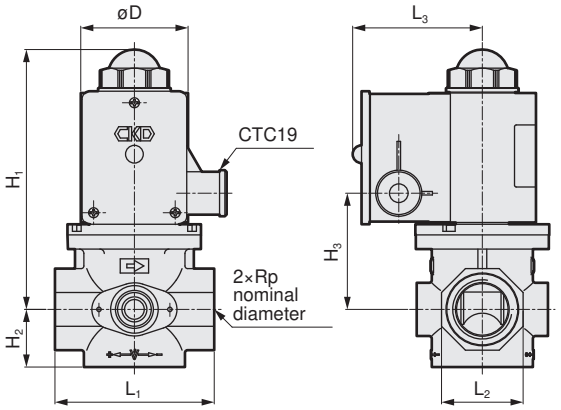

Code / Model No.	Port size	H1	H2	H3	L1	L2	L3	øD
VNA-15-L	1/2	132.5	24.5	51	69	32	68	50
VNA-20-L	3/4	147	33	65.5	89	46	73	60.5
VNA-25-L	1	147	33	65.5	89	46	73	60.5
VNA-32-L	1¼	166	39.5	84.5	128	65	78	70
VNA-40-L	1½	166	39.5	84.5	128	65	78	70
VNA-50-L	2	221	66.5	137	180	80	88	90
VNA-65-L	2½	232	77.5	148	218	95	106	127

● Outdoor type
VNA-15 to 65-ZZ

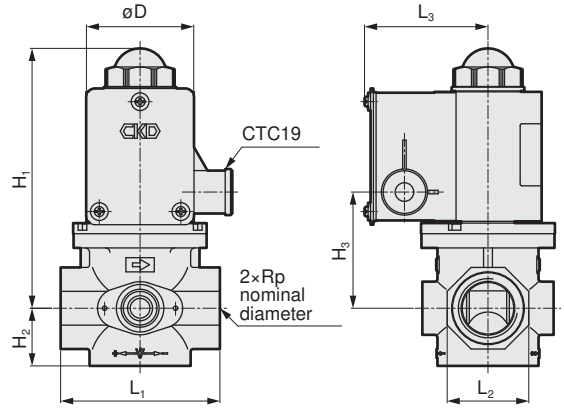

Code / Model No.	Port size	H1	H2	H3	L1	L2	L3	øD
VNA-15-ZZ	1/2	132.5	24.5	51	69	32	63	50
VNA-20-ZZ	3/4	147	33	65.5	89	46	68	60.5
VNA-25-ZZ	1	147	33	65.5	89	46	68	60.5
VNA-32-ZZ	1¼	166	39.5	84.5	128	65	73	70
VNA-40-ZZ	1½	166	39.5	84.5	128	65	73	70
VNA-50-ZZ	2	221	66.5	137	180	80	83	90
VNA-65-ZZ	2½	232	77.5	148	218	95	101	127

Optional dimensions

● With operation confirmation micro switch
VNA-15 to 65-E

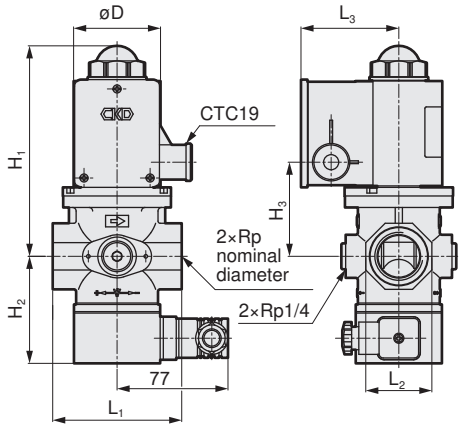

* Pressure detection port is provided as standard. Flow rate adjustment is not available.

Code / Model No.	Port size	H1	H2	H3	L1	L2	L3	øD
VNA-15-E	1/2	132.5	69.5	51	69	32	63	50
VNA-20-E	3/4	147	75	65.5	89	46	68	60.5
VNA-25-E	1	147	75	65.5	89	46	68	60.5
VNA-32-E	1¼	166	81.5	84.5	128	65	73	70
VNA-40-E	1½	166	81.5	84.5	128	65	73	70
VNA-50-E	2	221	104.5	137	180	80	83	90
VNA-65-E	2½	232	115.5	148	218	95	101	127

● With pressure detection port
VNA-15 to 65-P

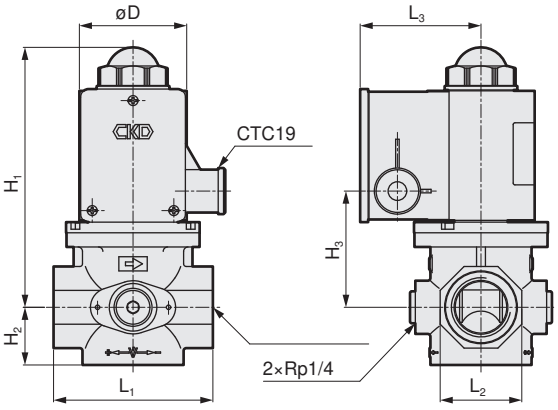

* The pressure detection port is connected to the IN side.

Code / Model No.	Port size	H1	H2	H3	L1	L2	L3	øD
VNA-15-P	1/2	132.5	24.5	51	69	32	63	50
VNA-20-P	3/4	147	33	65.5	89	46	68	60.5
VNA-25-P	1	147	33	65.5	89	46	68	60.5
VNA-32-P	1¼	166	39.5	84.5	128	65	73	70
VNA-40-P	1½	166	39.5	84.5	128	65	73	70
VNA-50-P	2	221	66.5	137	180	80	83	90
VNA-65-P	2½	232	77.5	148	218	95	101	127

● Large flow rate specifications
VNA-32, 40-D

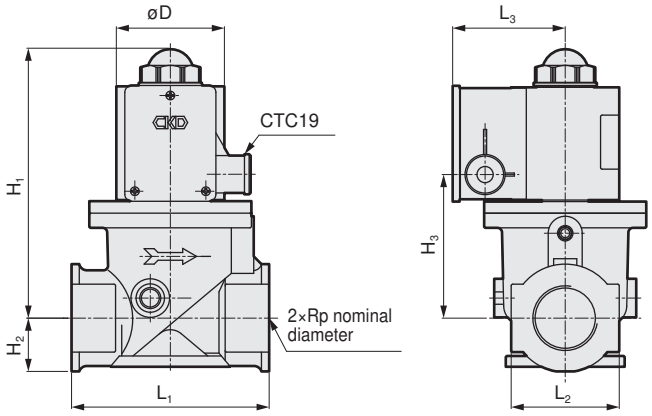

* Flow rate adjustment is not available.

Code / Model No.	Port size	H1	H2	H3	L1	L2	L3	øD
VNA-32-D	1¼	174.5	35	93	128	70	73	70
VNA-40-D	1½	174.5	35	93	128	70	73	70