

Manual pinch valve

HPV Series

- Working fluid: Water/sludge/powder
- Port size: 25 to 100 flange (JIS10K)

For various fluids including water, sludge, powder, etc.

- Completely closed structure
- Zero fluid resistance and no clogging
- Won't clog even with solids
- Consumables are rubber sleeve only
- Flange packing seal not required

Specifications

Item		HPV-25A	HPV-40A	HPV-50A	HPV-65A	HPV-80A	HPV-100A
Working fluid		Water/sludge/powder/non-corrosive fluids (refer to Intro Page 39 for details.)					
Connection		25 flange	40 flange	50 flange	65 flange	80 flange	100 flange
Bore size	mm	25	40	50	65	80	100
Cv		35	90	200	350	490	620
Proof pressure	MPa	1.0 (≈150 psi, 10 bar)					
Working pressure	MPa	0.05 (≈7.3 psi, 0.5 bar) to 0.5 (≈73 psi, 5 bar)					
Fluid temperature	°C	5 (41°F) to 60 (140°F)					

*1 : Use in the fully open or fully closed position.
*2 : When the secondary side is open, be sure to fasten the sleeve using a companion flange.

How to order

HPV - 25A - T

Ⓐ Port size

Ⓑ Rubber sleeve material

Code	Description
Ⓐ Port size	
25A	25 flange
40A	40 flange
50A	50 flange
65A	65 flange
80A	80 flange
100A	100 flange
Ⓑ Rubber sleeve material	
T	Natural rubber
N	Chloroprene rubber

Internal structure and parts list

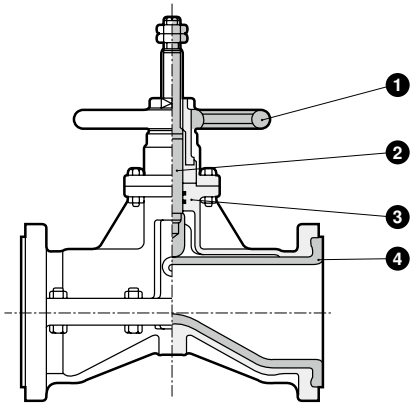

No.	Part name	Material	
1	Handle	FC250	Cast iron
2	Stem	SUS403	Stainless steel
3	Body	FC250	Cast iron
4	Sleeve	Natural rubber or chloroprene rubber	

Dimensions

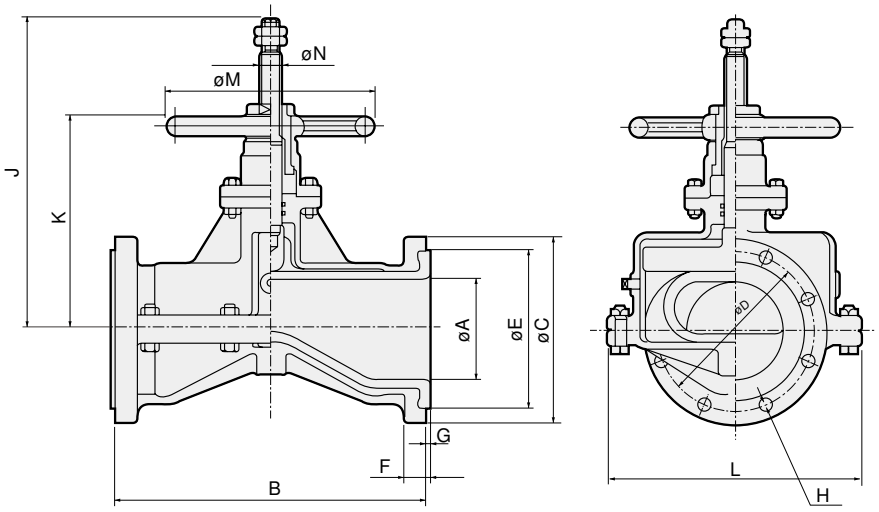

Model No.	A	B	Flange						J	K	L	M	N
			C	D	E	F	G	H					
HPV-25A	25	149	125	90	70	16	3	4-ø19	202	139	126	160	18
HPV-40A	40	184	140	105	85	18	3	4-ø19	249	168	167	180	20
HPV-50A	50	211	155	120	100	18	4.5	4-ø19	269	181	203	180	20
HPV-65A	65	260	175	140	120	18	5	4-ø19	324	210	234	200	22
HPV-80A	80	289	185	150	130	18	5.5	8-ø19	363	240	261	224	24
HPV-100A	100	338	210	175	155	20	6	8-ø19	421	272	294	280	28