Terminal box



● Terminal box
This terminal box is available as a solenoid valve accessory for easy coil wiring of the solenoid valve.

Features

- Due to its design specific to solenoid valve coil connections, this terminal box is ideal for power supply connections.
- A model equipped with an indicator lamp to enable checking of the ON-OFF of the power supply from the outside is also available.
- The marine cable gland can be connected as is.

Type and specifications of terminal box

Item / Type	Terminal count	Existence of indicator lamp	Power supply	Screw size A	Screw size B
HP terminal box	3P	Without indicator lamp	AC/DC power supply shared	M16	G1/2
			Rating of 400 V, 10 A or less	CTC19	G1/2
		With indicator lamp	For AC/DC power supply (with neon light)	M16	G1/2
			Rating 100/200 VAC 100/200 VDC / 1A	CTC19	G1/2
			For DC power supply (with LED)	M16	G1/2
			Rating 24 VDC 6.3 mA	CTC19	G1/2

* Contact a CKD sales representative for details regarding models

Dimensions and internal structure

● HP terminal box

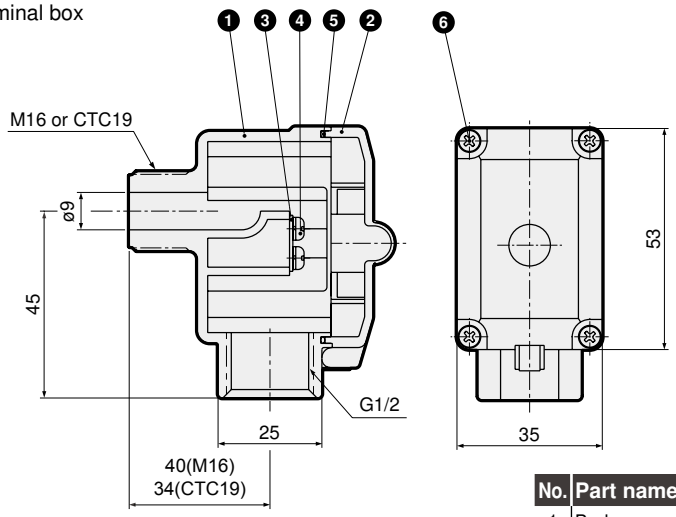

No.	Part name	Material
1	Body	PA
2	Cover	PA
3	Terminal	C2680
4	Wiring thread	SS
5	Gasket	NBR
6	Fixing screw	SS

Marine cable gland



When water proof wiring port is required for solenoid valve with terminal box, marine cable gland should be used.

Dimensions

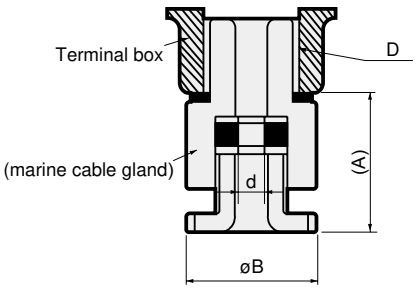

*1 : Dimensions with * are provided for reference.
*2 : Select the model based on dimension D (selection based on terminal box screw size) and dimension d (selection based on wiring cable size).

Model No.	A *	B	D	d
A-15a	39	28	G1/2	9
A-15b	39	28	G1/2	10
A-15c	39	28	G1/2	11
A-20a	43	34	G3/4	12
A-20b	43	34	G3/4	13
A-20c	43	34	G3/4	15