

Direct acting 3-port valve
Discrete valve/sub-plate piping

3QE Series

Individual wiring manifold/sub-plate piping

M3QE Series

● Cylinder bore size: ø6 to ø20

JIS symbol

● 2-position
Single (NC)

Without manual override

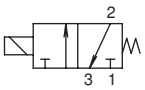

With manual override

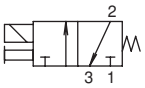

Common specifications

Item	Description
Valve and operation	Direct acting poppet valve
Working fluid	Compressed air
Max. working pressure MPa	0.7
Min. working pressure MPa	0
Proof pressure MPa	1.05
Ambient temperature °C	-5 to 55 (no freezing)
Fluid temperature °C	5 to 55
Manual override	None/Non-locking manual/ Locking manual override
Lubrication *1	Not required
Degree of protection *2	Dust-proof
Vibration resistance m/s^2	50 or less
Impact resistance m/s^2	300 or less
Atmosphere	In a corrosive gas atmosphere Not available
Port size	M5

*1. Use turbine oil Class 1 ISO VG32 for lubrication.
*2. Avoid water drops or oil, etc., during use.

Electrical specifications

Item		Description	
		Standard	Low exoergic/low energy
Rated voltage (V)		DC3, 5, 12, 24V 100 VAC	12, 24 VDC
Voltage fluctuation range		±10%	
Holding current A *3	3 VDC	0.120 (0.136)	-
	5 VDC	0.072 (0.082)	-
	12 VDC	0.030 (0.034)	(0.010)
	24 VDC	0.015 (0.017)	(0.005)
	100 VAC	0.009 (0.010)	-
Power consumption W *3	3 VDC	0.35 (0.40)	-
	5 VDC	0.35 (0.40)	-
	12 VDC	0.35 (0.40)	0.10
	24 VDC	0.35 (0.40)	0.10
Apparent power VA Values in ( ) are with lamp	100 VAC	0.93 (0.98)	-
Thermal class		B	
Surge suppressor		Option	
Indicator		LED	

*3. Values in ( ) apply when lamp is included.In addition, the type with low exoergic/energy circuit is only available with lamp.

Performance/characteristics

Item	3QE
Flow characteristic C $[dm^3/(s \cdot bar)]$	1 → 2: 0.04, 2 → 3: 0.06
Response time *4 ms	ON:6 OFF:3
Weight *5 g	16

*4: According to JIS B 8419:2010 Dynamic performance testing.
(Initial values at supply pressure 0.5 MPa, 20°C, no lubrication, rated voltage, continuous operation)
*5: The weight listed is the weight without the base.

Ozone-proof specifications

Conforms to low-concentration ozone specifications as standard.

CE marking specifications

** - Voltage - **ST**

• Standard voltage of 24 VDC or less is CE marking-compatible even if the model No. is not indicated with "ST".

How to order

● Discrete valve

3QE1 1 0 - M5 - M E2 A —— 3

● Discrete valve for mounting base

3QE1 1 9 - 00 - E2 E —— 3

● Manifold model No.
Side piping manifold

M3QE1 1 0 - M5 - M1 - 10 - 3

Rear piping manifold

M3QZ1 1 0 - M5 - M1 - 10 - 3

Ⓐ Model No. | Operation | Ⓑ Solenoid position | Ⓒ Port size | Ⓓ Manual override | Ⓔ Electrical connections | Ⓕ Option | Ⓖ Station No. | Ⓗ Voltage

Ⓐ Model No.	3QE1	M3QZ1 M3QE1
Ⓑ Solenoid position		
1 2-position single normally closed	●	●
8 Mix manifold		●
Ⓒ Port size		
M5 M5	●	●
Ⓓ Manual override		
Blank Without manual override	●	●
M Non-locking manual override	●	●
M1 Locking manual override	●	●
Ⓔ Electrical connections		
Blank Grommet lead wire (300 mm) *1	●	●
E0 E-connector lead wire (300 mm)	●	●
E00 E-connector lead wire (500 mm)	●	●
E01 E-connector lead wire (1000 mm)	●	●
E02 E-connector lead wire (2000 mm)	●	●
E03 E-connector lead wire (3000 mm)	●	●
E0N E-connector without lead wire (without socket)	●	●
E1 E-connector without lead wire (with socket/terminal)	●	●
E2 E-connector, lead wire (300 mm) with lamp/surge suppressor	●	●
E20 E-connector, lead wire (500 mm) with lamp/surge suppressor	●	●
E21 E-connector, lead wire (1000 mm) with lamp/surge suppressor	●	●
E22 E-connector, lead wire (2000 mm) with lamp/surge suppressor	●	●
E23 E-connector, lead wire (3000 mm) with lamp/surge suppressor	●	●
E2N E-connector without lead wire (without socket) with lamp/surge suppressor	●	●
E3 E-connector without lead wire (with socket/terminal) with lamp/surge suppressor	●	●
E01J EJ-connector, lead wire (1,000 mm)	●	●
E02J EJ-connector, lead wire (2,000 mm)	●	●
E03J EJ-connector, lead wire (3,000 mm)	●	●
E21J EJ-connector, lead wire (1,000 mm) with lamp/surge suppressor	●	●
E22J EJ-connector, lead wire (2,000 mm) with lamp/surge suppressor	●	●
E23J EJ-connector, lead wire (3,000 mm) with lamp/surge suppressor	●	●
Ⓕ Option		
A Ozone/coolant proof	●	●
S Surgeless *2	●	●
E Low exoergic/energy circuit *2, *3	●	●
F Port A filter integrated *4		●
Ⓖ Station No.		
2 to 20 2 stations to 20 stations		●
Ⓗ Voltage		
1 100 VAC (rectifier integrated)	●	●
3 24 VDC	●	●
4 12 VDC	●	●
7 3 VDC	●	●
8 5 VDC	●	●

Precautions for model No. selection

*1 : The grommet lead wire specifications support DC voltage only.
2 : E2 type and E2*J type connectors support 12/24 VDC only. In addition, surgeless "S" and low exoergic/energy circuit "E" cannot be selected together.
*3 : Surgeless specifications.
*4 : A filter is built into port P as standard.

[Example of model No.]

M3QE110-M5-M1E0A-10-3

Ⓐ Model No. : Side layout manifold
Ⓑ Solenoid position : 2-position normally closed
Ⓒ Port size : M5
Ⓓ Manual override : Locking manual override
Ⓔ Electrical connections : E-connector lead wire 300 mm
Ⓕ Option : Fluorine specification
Ⓖ Station No. : 10 stations
Ⓗ Voltage : 24 VDC

How to order masking plate kit

3QE1 - MP - KIT

* Gasket/mounting screw included

Manual override

Blank Without manual override	M Non-locking manual override	M1 Locking manual override
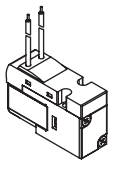	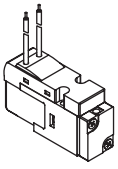	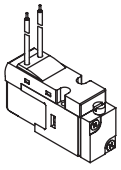

Electrical connections

Blank Grommet lead wire	E* E-connector	EJ* EJ-connector	E1 E-connector With socket/terminal	E0N E-connector Without socket
· Lead wire length 300 mm 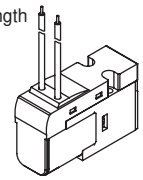	· Lead wire length 300 mm 500 mm 1000 mm 2000 mm 3000 mm 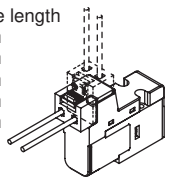	· Lead wire length 1000 mm 2000 mm 3000 mm 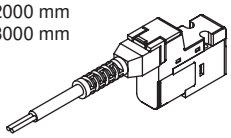	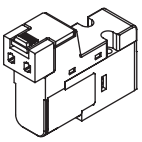	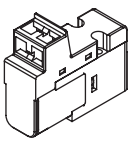

Dimensions (3QE)

3QE110-M5

· 2-position single: grommet lead wire

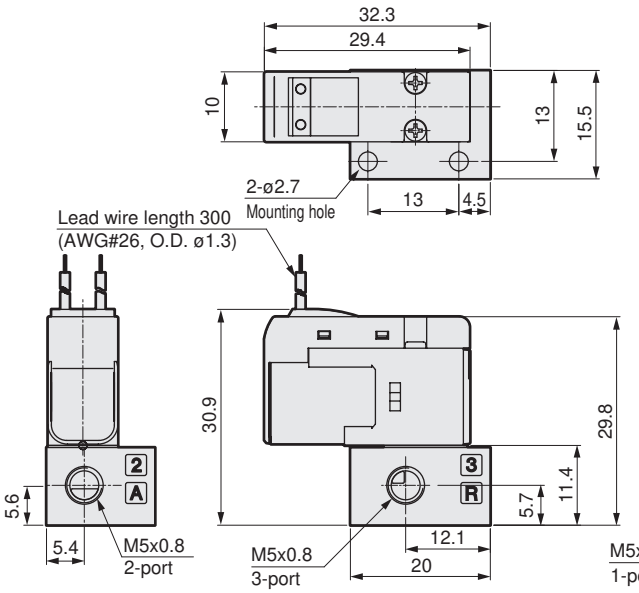

· E-connector (E)

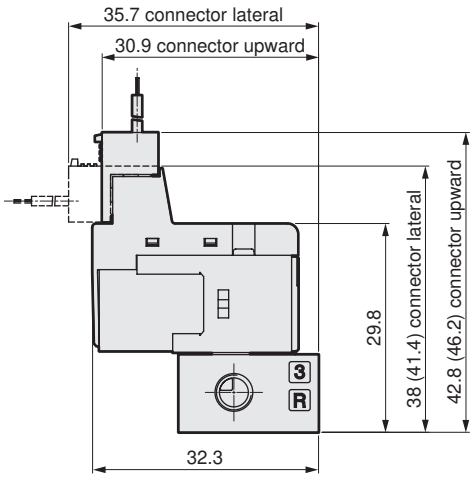

· Non-locking manual override (M)

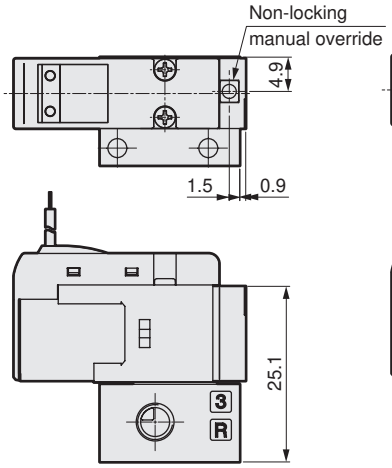

· Locking manual override (M1)

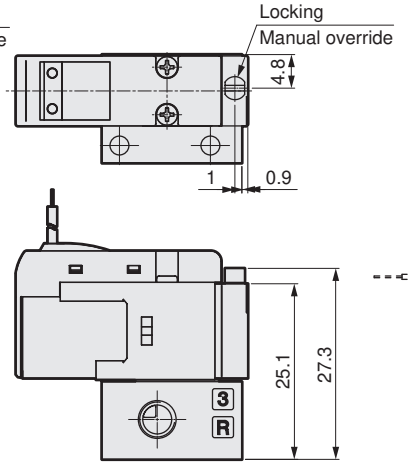

· EJ-connector (E*J)

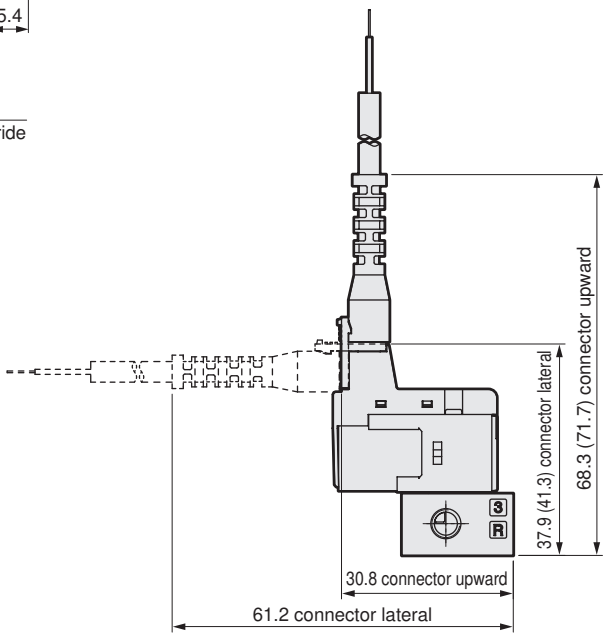

3QE119-00

· 2-position single: grommet lead wire

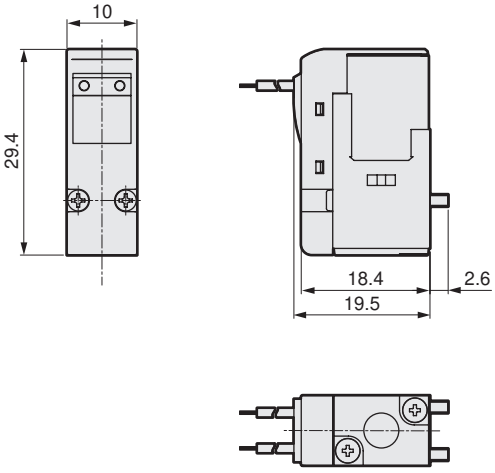

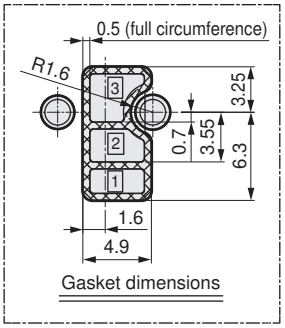

Gasket dimensions

· Non-locking manual override (M)

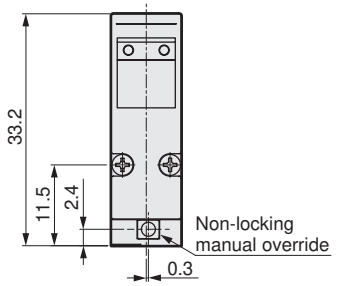

· Locking manual override (M1)

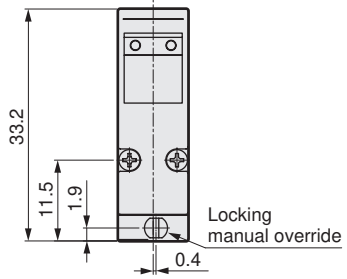

Dimensions (M3QE/M3QZ)

M3QE110-M5

· 2-position single: grommet lead wire

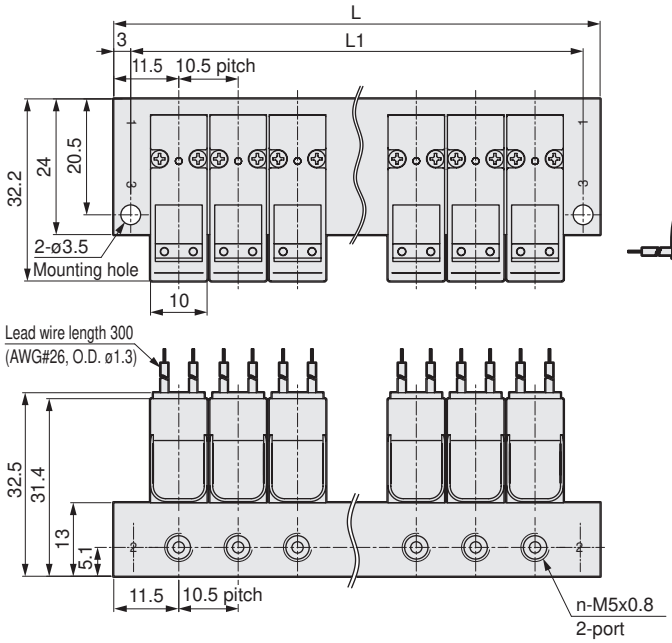

· E-connector (E)

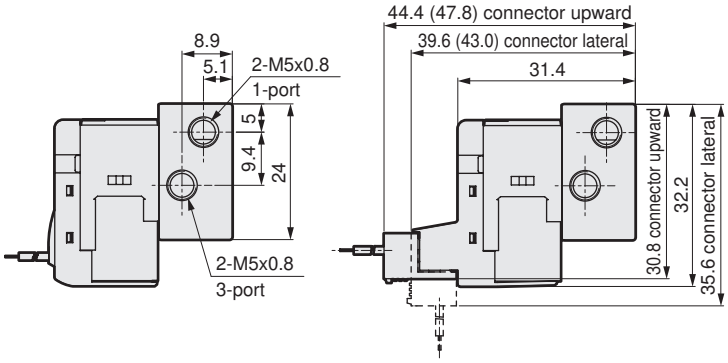

· EJ-connector (E*J)

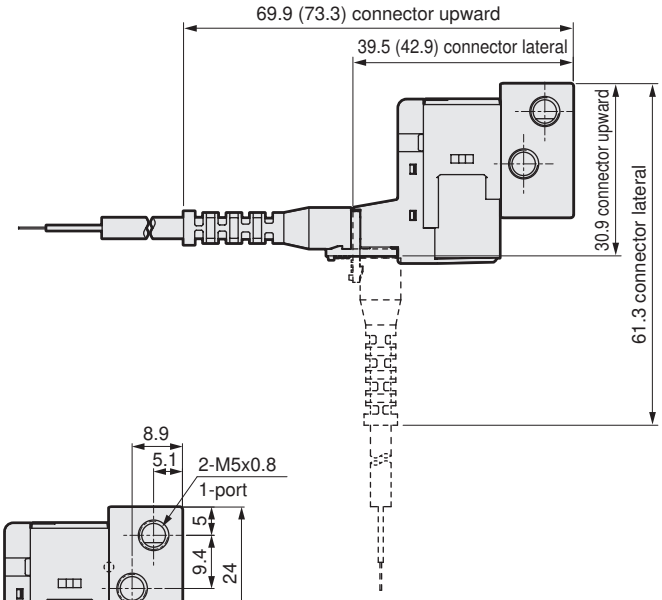

M3QZ110-M5

· 2-position single: grommet lead wire

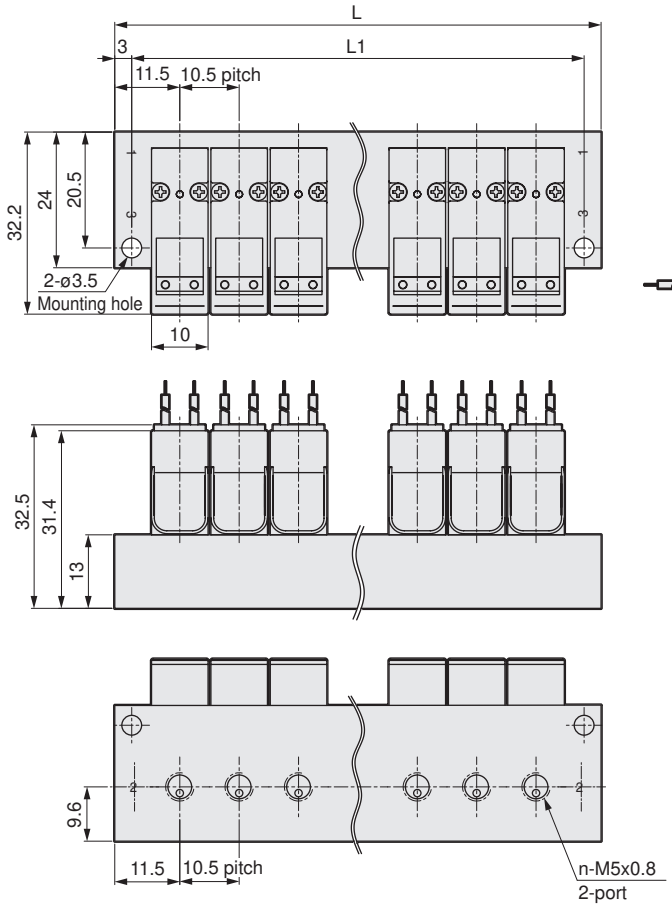

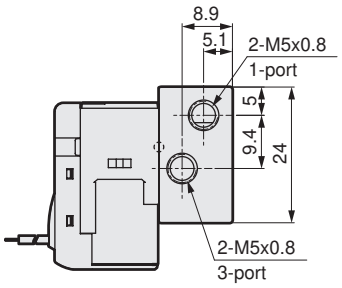

· E-connector (E)

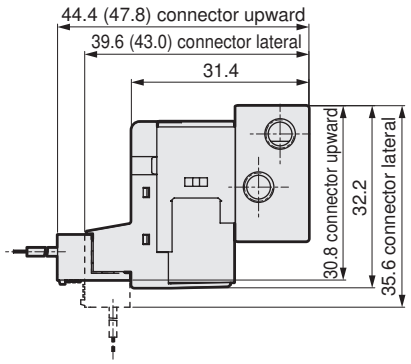

Station No.	2	3	4	5	6	7	8	9	10	11	12	13	14	15	16	17	18	19	20
L	33.5	44.0	54.5	65.0	75.5	86.0	96.5	107.0	117.5	128.0	138.5	149.0	159.5	170.0	180.5	191.0	201.5	212.0	222.5
L1	27.5	38.0	48.5	59.0	69.5	80.0	90.5	101.0	111.5	122.0	132.5	143.0	153.5	164.0	174.5	185.0	195.5	206.0	216.5

Dimensions (M3QE)

M3QE110-M5

· Non-locking manual override (M)

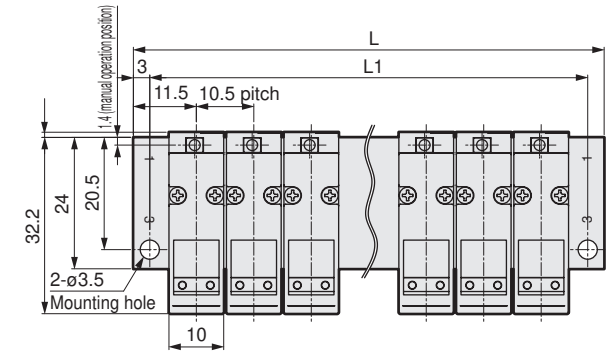

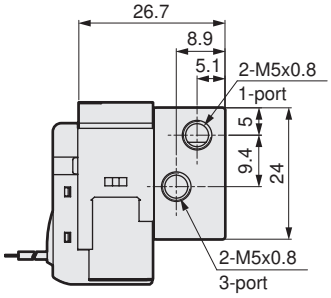

· E-connector (E)

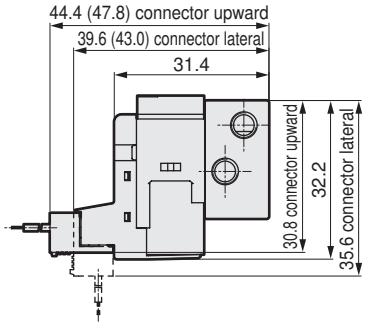

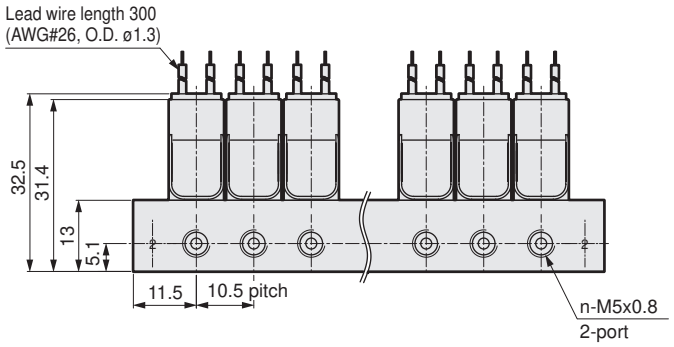

· EJ-connector (E*J)

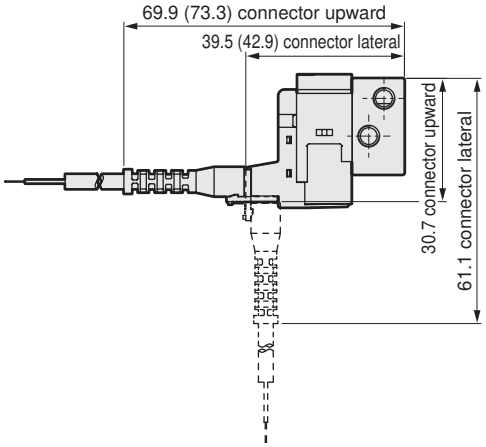

M3QE110-M5

· Locking manual override (M1)

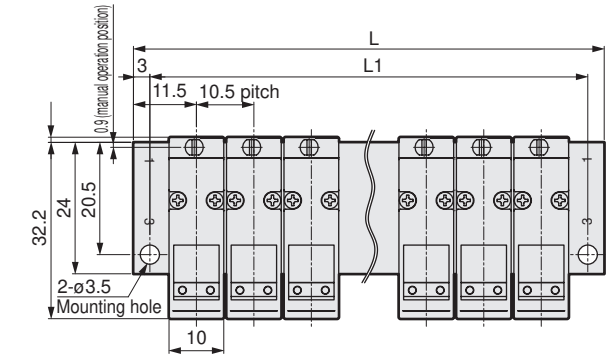

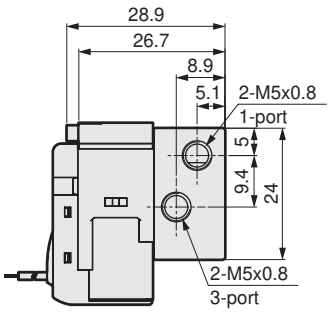

· E-connector (E)

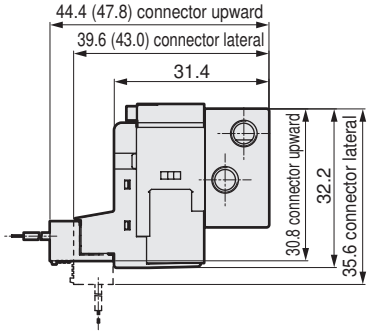

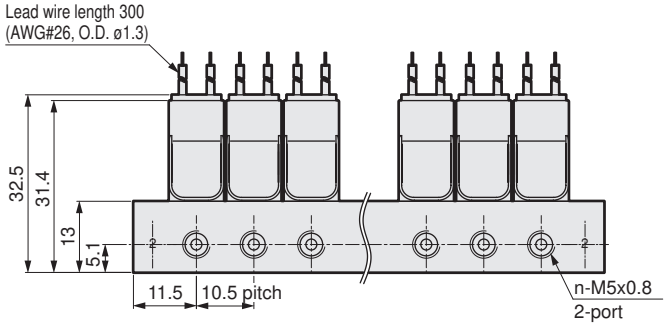

· EJ-connector (E*J)

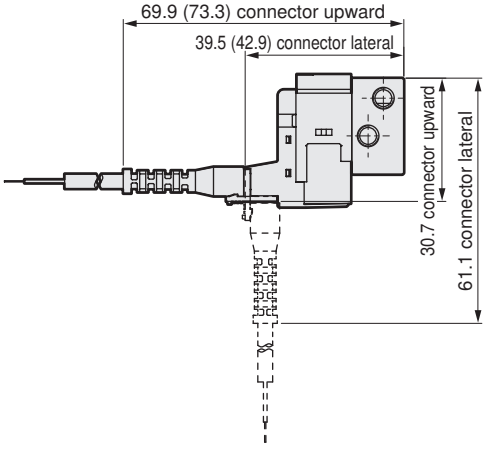

Station No.	2	3	4	5	6	7	8	9	10	11	12	13	14	15	16	17	18	19	20
L	33.5	44.0	54.5	65.0	75.5	86.0	96.5	107.0	117.5	128.0	138.5	149.0	159.5	170.0	180.5	191.0	201.5	212.0	222.5
L1	27.5	38.0	48.5	59.0	69.5	80.0	90.5	101.0	111.5	122.0	132.5	143.0	153.5	164.0	174.5	185.0	195.5	206.0	216.5

Internal structure and parts list

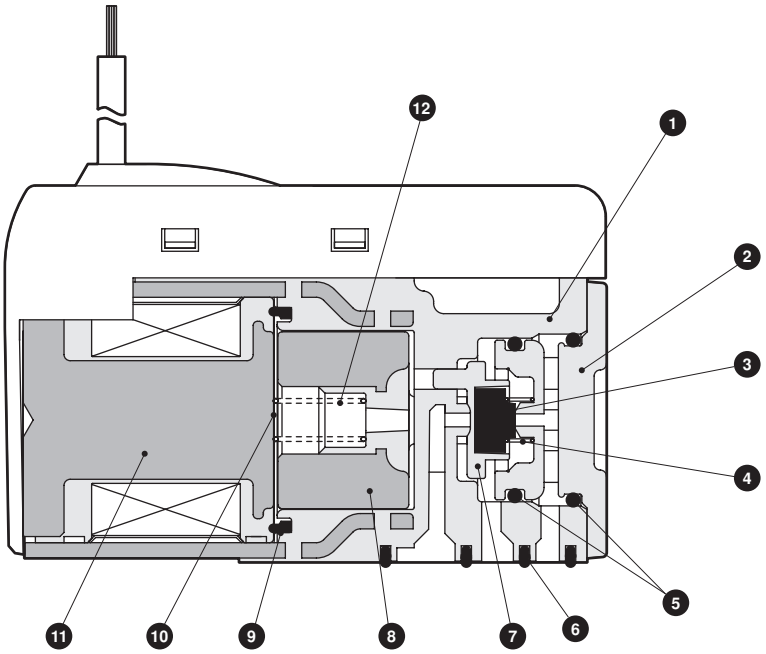

No.	Part name	Material
1	Body	Resin
2	Body (plug)	Resin
3	Valve seat	Nitrile rubber
4	Valve spring	Stainless steel
5	O-ring	Hydrogenated nitrile rubber
6	Body gasket	Hydrogenated nitrile rubber
7	Valve guide	Resin
8	Plunger	Stainless steel
9	Coil gasket	Silicone rubber
10	Buffer sheet	Resin
11	Coil assembly	-
12	Plunger spring	Stainless steel

How to use E and EJ models

How to use E-connector

■The E-connector has top and side connectors to which sockets can be connected. The socket assembly is connected from the upward direction at shipment. Select the connection direction based on the installation environment.

■How to mount and remove socket

- When mounting the socket, hold the lever and socket with fingers and insert straight into the square window on the connector body. Align the lever finger with the groove on the connector body and lock it. When mounting from the top, position the socket so that the lever faces the front. When mounting from the side, position the socket so that the lever is in an upward direction.
- When pulling out the socket, press down the lever to release its finger from the groove, then pull straight out.

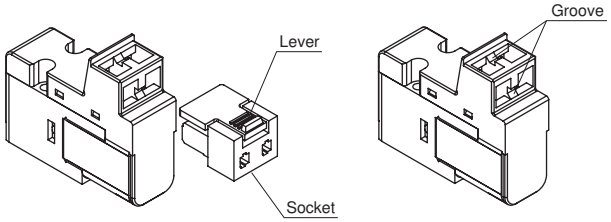

■How to connect lead wire

- Strip the end of the lead wire by about 3 mm. Align the ends of the core wires, insert them into the contact terminal, and crimp with a crimping tool. When crimping, check that both the sheath and core wires are held, and that 0 to 0.5 mm of the core wire ends is visible.
- After crimping, position the contact terminal as shown below, and insert into the square window on the socket. The terminal locks when it is inserted to the end. After inserting, pull the terminal lightly to check that it is locked.

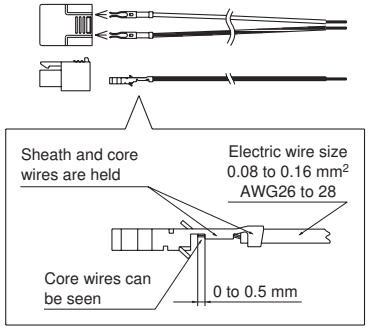

How to use E□J-connector

■Use the lead wire with limited bending as shown in the figure below.

