

Residual Pressure Exhaust Valve with Spool Position Detection

SNS Series

● Port size: Rc3/8, Rc1/2, G1/2, NPT3/8, NPT1/2

Common specifications

Descriptions	Content
Valve type and operation	Pilot operated soft spool valve
Working fluid	Compressed air
Max. working pressure MPa	0.7
Min. working pressure	0.2 (For internal pilot specifications)
MPa	0 (For external pilot specifications)
External pilot pressure MPa	0.2 to 0.7
Proof pressure MPa	1.05
Ambient temperature °C	-5 to 55 (no freezing)
Fluid temperature °C	5 to 55
Manual override	Non-locking/locking common (Standard)
Lubrication *1	Not required
Degree of protection *2	Dust proof/jet proof (IP65)
Vibration resistance m/s^2	50 or less
Shock resistance m/s^2	300 or less
Atmosphere	Cannot be used in corrosive gas environments
Maximum operating frequency	30 cycles/min.
Minimum operating frequency	1 cycle/week

Electrical specifications

Descriptions	Content
Rated voltage V	DC24
Voltage fluctuation range	±10%
Holding current A	0.042
Power consumption W	1.0
Thermal class	B
Surge suppressor	Varistor
Indicator	LED

Individual specifications

Descriptions		Content
Port size	Port P/A	Rc3/8, Rc1/2, G1/2, NPT3/8, NPT1/2
	Port R	Rc3/8, G3/8, NPT3/8

*1. Use turbine oil Class 1 ISO VG32 for lubrication.
Excessive or intermittent lubrication results in unstable operation.
*2. Use the specified outer diameter of the cord and tightening torque for fixing. Do not use this product in environments where it will be constantly exposed to water or oil. IP65 (IEC60529 [IEC529:1989-11]) standards are applied to the test.
*3: Refer to page 7 for working pressure.
*4. Pilot exhaust is an atmospheric release type. Ports have not been machined.

JIS symbol

● 1 station

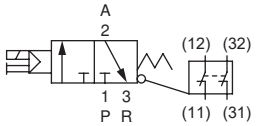

● 2 stations

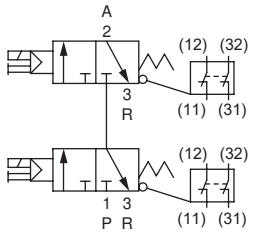

Weight

Unit: kg

Descriptions			Weight
1 station	With safety limit switch	Pg13.5	0.7
		M12-4P connector	0.7
	Without switch		0.6
2 stations	With safety limit switch	Pg13.5	1.2
		M12-4P connector	1.2

Flow characteristics

Model No.	Station No.	P→A	A→R
		C[dm^3/(s·bar)]	
SNS	1 station	13	14
	2 stations	10	14

*1: Effective cross-sectional area S and sonic conductance C are converted as S ≈ 5.0 × C.
*2: Values of flow characteristics are for Rc1/2 port size.

Limit switch specifications

Descriptions	Limit switch specifications	
Manufacturer model	D4N-1B31 (OMRON)	D4N-9B31 (OMRON)
Terminal	Pg13.5	M12-4P connector
Contact resistance	25 mΩ or less	
Minimum applicable load	5 VDC 1 mA resistance load	
Rated insulation voltage V	300	
Insulation resistance MΩ	100	
Electric shock protection class	Class II	
Pollution degree (working environment)	3 (EN60947-5-1)	
Conditional short-circuit current A	100	

* Refer to the manufacturer's catalog for details.

How to order

SNS - 2 - 15A - M B L K S - 3

Model No.

Ⓐ Station No.

Ⓑ Port size

Ⓒ Manual override

Ⓓ Electrical connections

Ⓔ Safety limit switch

Ⓕ Pilot operated

Ⓖ Flow direction option

Ⓗ Silencer

Ⓘ Voltage

Code	Content
Ⓐ Station No.	
1	1 station
2	2 stations
Ⓑ Port size	
10A	Rc3/8
15A	Rc1/2
15G	G1/2
10N	NPT3/8
15N	NPT1/2
Ⓒ Manual override	
Blank	Manual override of non-locking/locking common
M	Manual override of non-locking
Ⓓ Electrical connections	
B	DIN terminal box (Pg7) with surge suppressor/lamp
BN	DIN terminal box (Pg7) (without terminal box) with surge suppressor
Ⓔ Safety limit switch	
Blank	Without switch (*1)
L	Pg13.5 (D4N-1B31: OMRON)
M	M12-4P connector (D4N-9B31: OMRON)
Ⓕ Pilot operated	
Blank	Internal pilot
K	External pilot
Ⓖ Flow direction option	
Blank	Standard flow (left → right)
X1	Reverse flow (right → left) (*2)
Ⓗ Silencer	
Blank	None
S	Silencer (SLW-10L) attached (*3)
Ⓘ Voltage	
3	24 VDC

Precautions for model No. selection

*1: Available only when Ⓐ Station No. is "1".
* Not compliant with safety standards.
*2: Available only when Ⓐ Station No. is "1".
*3: Available only when Ⓑ Port size is 10A or 15A.

[Example of model No.]

SNS-2-15A-MBLKS-3

Model No.	: SNS
Ⓐ Station No.	: 2 stations
Ⓑ Port size	: Rc1/2
Ⓒ Manual override	: Non-locking manual override
Ⓓ Electrical connections	: DIN terminal box (Pg7) with surge suppressor/lamp
Ⓔ Safety limit switch	: Pg13.5 (D4N-1B31: OMRON)
Ⓕ Pilot operated	: External pilot
Ⓖ Flow direction option	: Standard flow (left → right)
Ⓗ Silencer	: Silencer (SLW-10L) attached
Ⓘ Voltage	: 24 VDC

Internal structure and parts list

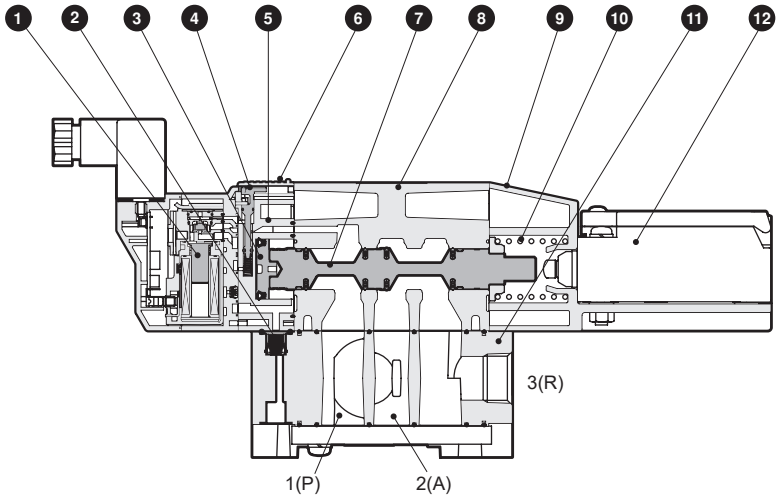

Parts list

No.	Part name	Material
1	Coil assembly	-
2	Check valve	Hydrogenated nitrile rubber
3	Piston assembly	-
4	Manual override	Resin
5	Piston chamber	Resin
6	Manual protection cover	Resin
7	Spool assembly	-
8	Body	Aluminum alloy die-casting
9	Cap	Resin
10	Spool spring	Stainless steel
11	Single base	Aluminum alloy die-casting
12	Safety limit switch	-

Dimensions

● 1 station (standard flow)

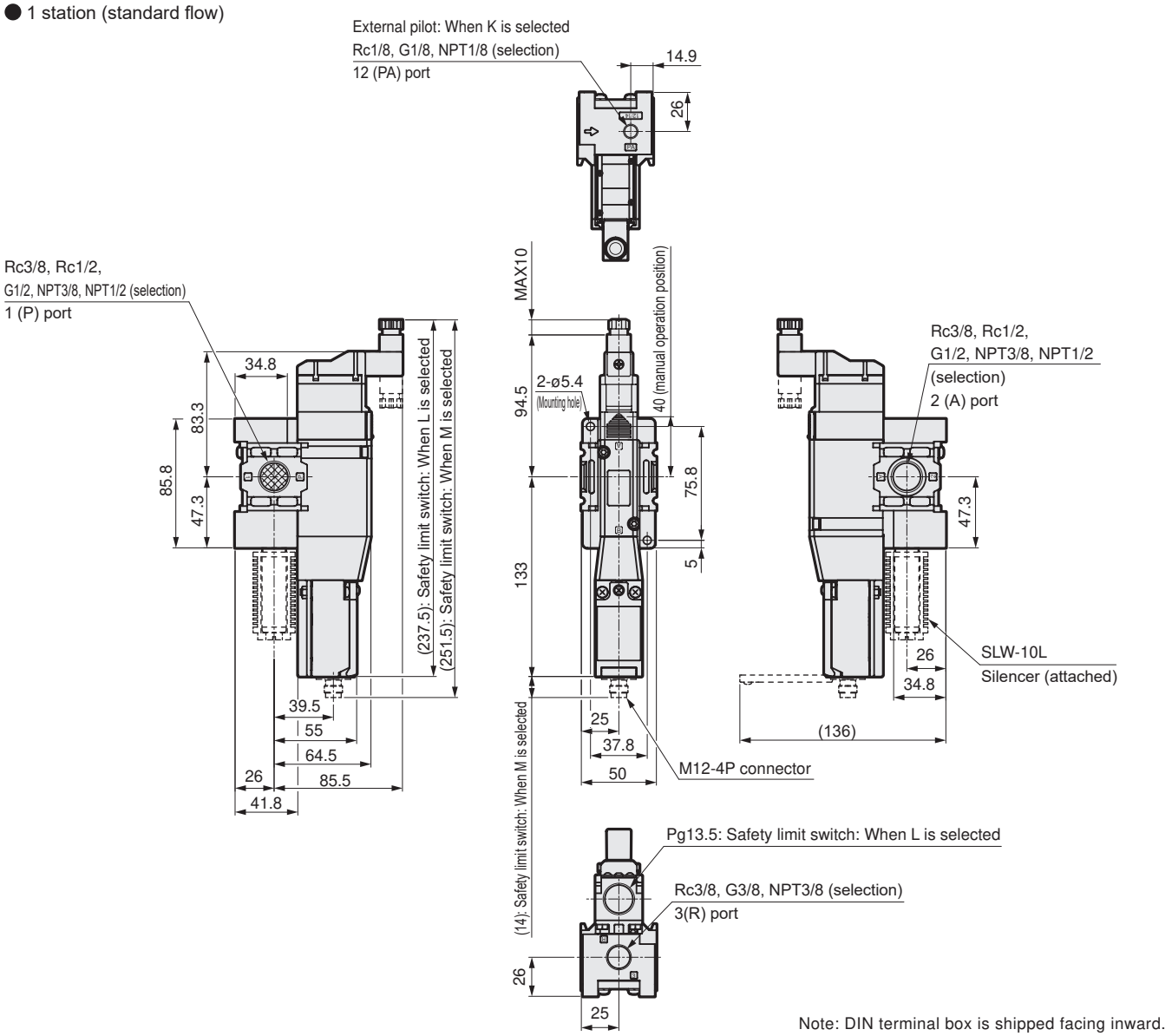

Note: DIN terminal box is shipped facing inward.

● Safety limit switch: Blank

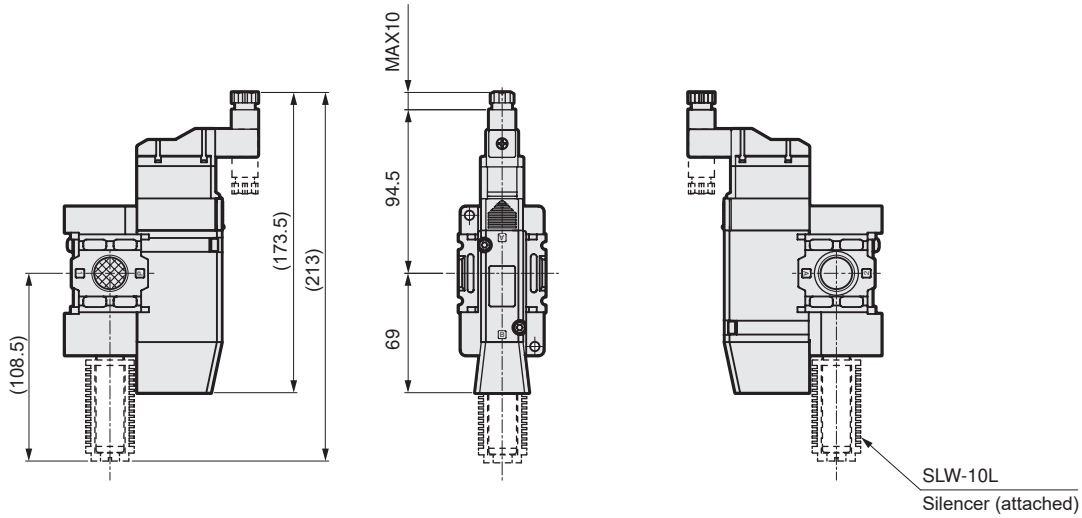

Dimensions

● 1 station (reverse flow)

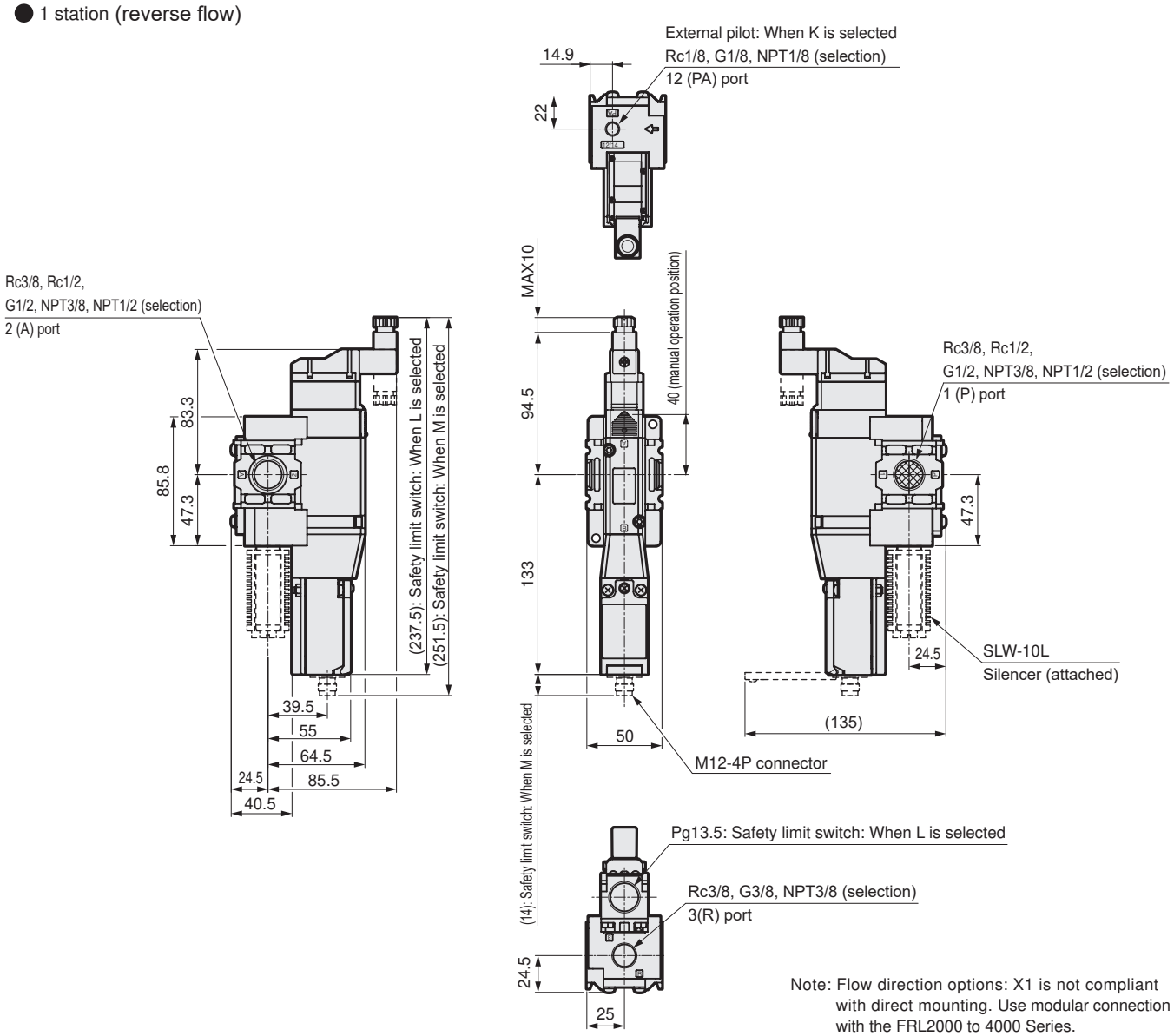

Note: Flow direction options: X1 is not compliant with direct mounting. Use modular connection with the FRL2000 to 4000 Series.
Note: DIN terminal box is shipped facing inward.

● Safety limit switch: Blank

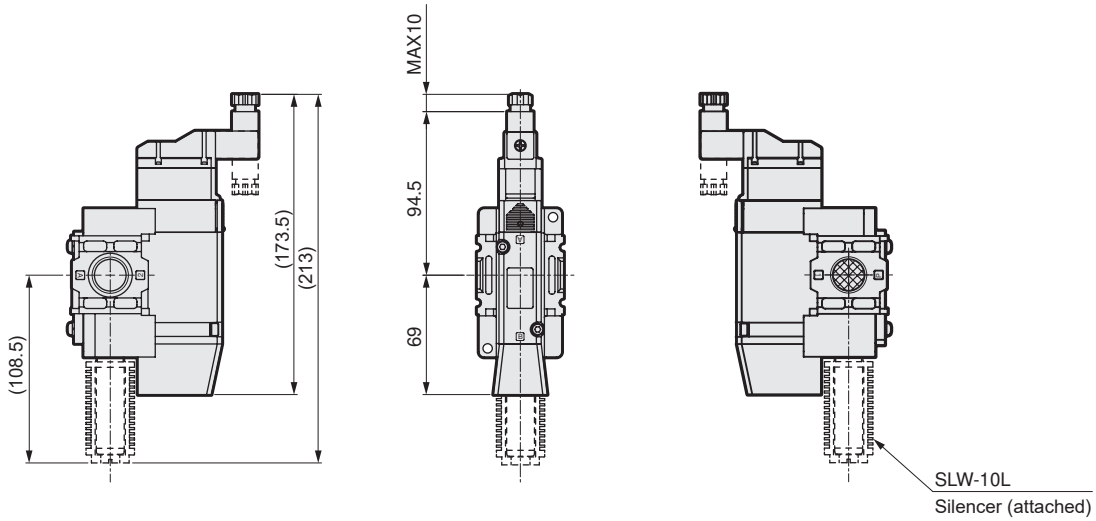

Dimensions

● 2 stations

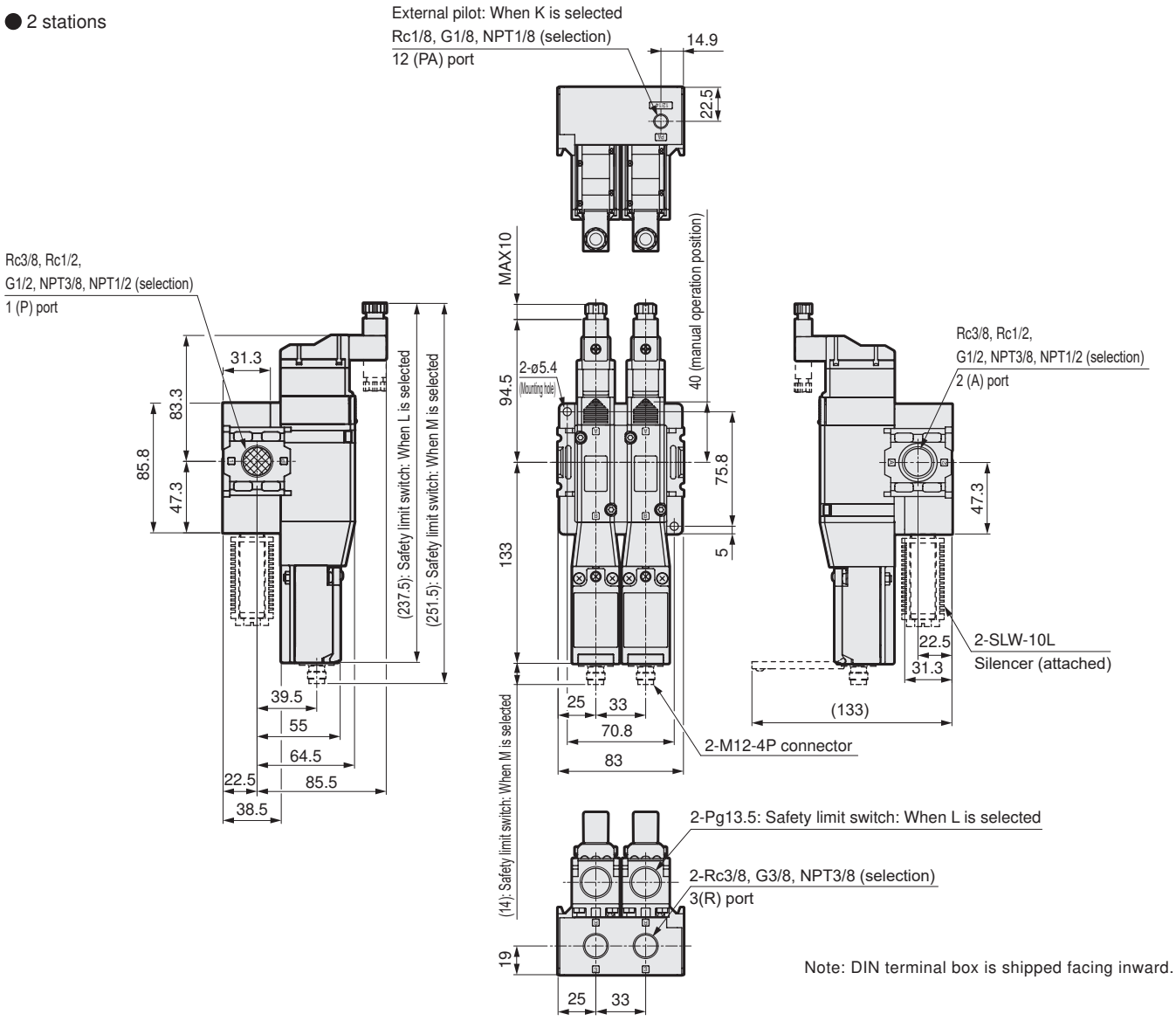

Note: DIN terminal box is shipped facing inward.

Parts list

● DIN terminal box

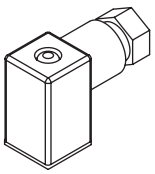

Part model No.

SNS-TERMINAL-BOX-3

Related products

● T bracket set

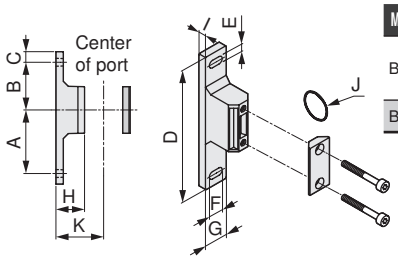

Model No.	Compatibility	A	B	C	D	E	F	G	H	I	J	K	Weight (kg)
B310-W	2000 Series 3000 Series	60	45	10	125	7	14	22	27	7	JISB2401-P21	45	0.086
B410-W	4000 Series	60	45	10	125	7	14	22	37	7	JISB2401-P21	55	0.094

· Material: Aluminum alloy die-casting (B310 to B410-W)
Painting (B310 to B410-W)

● Joiner set

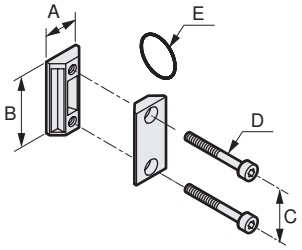

Model No.	Compatibility	A	B	C	D	E	Weight (kg)
C4000- J400-W	2000 Series 3000 Series 4000 Series	21	44	32	M5	JIS B2401-P21	0.036

· Material: Aluminum alloy die-casting (J400)
Painting (J400)