

Quick valve

2QV/3QV Series

● Port size: Push-in fitting ø4, ø6, ø8, ø10, ø12, R1/8 to R1/2

JIS symbol

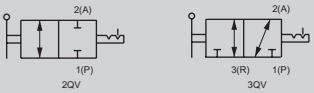

RoHS CAD

Features

- Straight flow path and large effective sectional area.
- Flame-resistant resin has been adopted as a standard material. (UL94 Standards V-0 equivalent)
- Manifold enabled by optional bracket.
- 2- and 3-port valves are available.

Specifications

Item	2QV/3QV
Working fluid	Air
Max. working pressure MPa	1.0 (≈150 psi, 10 bar)
Min. working pressure kPa	-100 (≈-15 psi, -1 bar) (*1)
Proof pressure MPa	1.5 (≈220 psi, 15 bar)
Fluid temperature °C	0 (32°F) to 60 (140°F)
Ambient temperature °C	0 (32°F) to 60 (140°F)
Switching angle °	90
Tube used	Soft nylon tube (tube F-15**) Urethane tube (tube U-95**, NU-**)
Mounting orientation	Arbitrary

*1: When using urethane tube (U-95**, NU-**) at vacuum, use an insert ring.
*2: Lubricant is used, so oil-prohibited specification is not available.

Operational explanation

● 2-port valve (2QV Series)

[Closed state] [Open state]

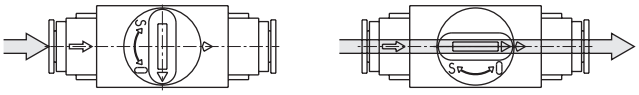

● 3-port valve (3QV Series)

[Exhaust status] [Air supply status]

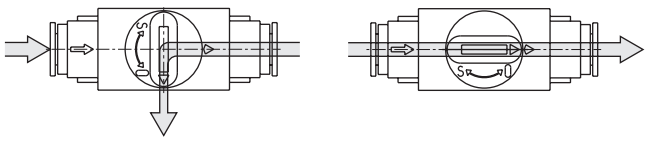

Applications

● Residual pressure exhaust valve in the air cylinder circuit

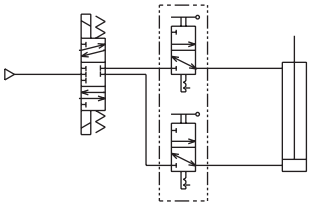

Quick valve (3QV)

● Stop valve in air blow circuit

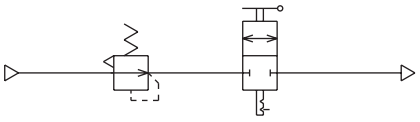

Quick valve (2QV)

Clean-room specifications (Catalog No. CB-033SA)

● Anti-dust generation structure for use in cleanrooms

2QV- P70

Specifications for rechargeable battery (Catalog No. CC-1226A)

● Design compatible with rechargeable battery manufacturing process

2QV- P4

How to order

● Quick valve

2 QV - 04-04

Ⓐ Valve

Ⓑ Port size (PPo-)-(APo-)

	Code	Description	Bracket *
	Ⓐ Valve type		
	2	2-way valve	
	3	3-way valve	
	Ⓑ Port size (PPo-)-(APo-)		
		IN side - OUT side	
Standard	04−04	Push-in fitting ø4 - Push-in fitting ø4	2QV-P1
Standard	06−06	Push-in fitting ø6 - Push-in fitting ø6	
Standard	08S-08S	Push-in fitting ø8 - Push-in fitting ø8	
Standard	08−08	Push-in fitting ø8 - Push-in fitting ø8	2QV-P2
Standard	10−10	Push-in fitting ø10 - Push-in fitting ø10	
Standard	12−12	Push-in fitting ø12 - Push-in fitting ø12	
Option	6A-04	R1/8 - Push-in fitting ø4	2QV-P1
Option	6A-06	R1/8 - Push-in fitting ø6	
Option	8A-06	R1/4 - Push-in fitting ø6	
Option	8A-08S	R1/4 - Push-in fitting ø8	
Option	10A-08	R3/8 - Push-in fitting ø8	2QV-P2
Option	10A-10	R3/8 -Push-in fittingø 10	
Option	15A-10	R1/2 -Push-in fitting ø10	
Option	15A-12	R1/2 -Push-in fitting ø12	
Option	04-6A	Push-in fitting ø4 - R1/8	2QV-P1
Option	06-6A	Push-in fitting ø6 - R1/8	
Option	06-8A	Push-in fitting ø6 - R1/4	
Option	08S-8A	Push-in fitting ø8 - R1/4	
Option	08-10A	Push-in fitting ø8 - R3/8	2QV-P2
Option	10-10A	Push-in fittingø 10- R3/8	
Option	10-15A	Push-in fitting ø10- R1/2	
Option	12-15A	Push-in fittingø12- R1/2	
Option	6A-6A	R1/8 - R1/8	2QV-P1
Option	8A-8A	R1/4 - R1/4	
Option	10A-10A	R3/8 - R3/8	2QV-P2
Option	15A-15A	R1/2 - R1/2	

* For 2- and 3-port valves, the bracket is common.
* Note that this may differ according to the body size.

⚠ Select the reverse regulator (R*100) or reverse filter regulator (W*100) when installing the 3QV onto the primary side of the regulator or filter regulator.

Internal structure and parts list

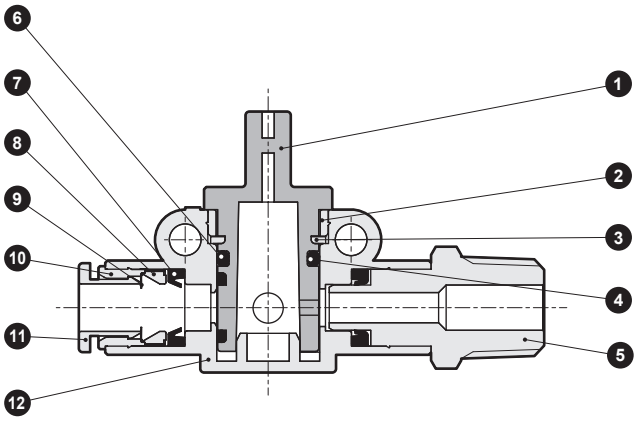

Parts list

Part No.	Part name	Material
1	Rotary shaft	PBT (UL94V-0 or equivalent)
2	Stopper	Brass (electroless nickeling treatment) *1
		Stainless steel *2
3	Ring	Steel
4	O-ring	Nitrile rubber
5	Nipple	Brass (electroless nickeling treatment)
6	O-ring	Nitrile rubber
7	Packing	Nitrile rubber
8	Chuck holder	polyether sulfone
9	Chuck	Stainless steel
10	Outer ring	Brass (electroless nickeling treatment)
11	Push ring	PBT (UL94V-0 or equivalent)
12	Body	PBT (UL94V-0 or equivalent)

*1: Dimensions A dimension, “18" Material of the model.
*2: Dimensions A dimension, “22" Material of the model.

Dimensions CAD

● Port size
·P-port (push-in fitting)/A-port (push-in fitting)

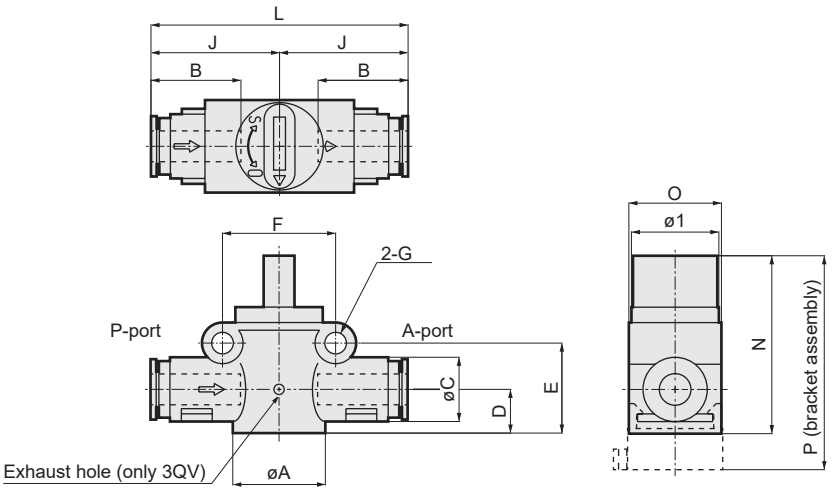

Compatible tube O.D. (mm)		Model No.	A	B	C	D	E	F	G	I	J	L	N	O	P	Weight	Eff. X-sectional area (mm²)	
P-port	A-port															(g)	P→A	A→R
ø4	ø4	2/3QV-04-04	18	16	12.5	8.5	17.5	22	4.2	17	25	50	34.5	18	41.5	20	4.2	1.8
ø6	ø6	2/3QV-06-06		17.5												21	9.3	
ø8	ø8	2/3QV-08S-08S		19	14.5						26.5	53				23	10.2	
ø8	ø8	2/3QV-08-08	22	19	17.5	10.7	22.8	26.5	4.2	17	31.5	63	39.8	22	46.8	34	17.5	4.0
ø10	ø10	2/3QV-10-10		21.5												35	22.5	
ø12	ø12	2/3QV-12-12		23	20						33	66				38	22.5	

* Tolerance of effective cross-sectional area is ±10%.

● Port size
·P-port (male thread)/A-port (push-in fitting)

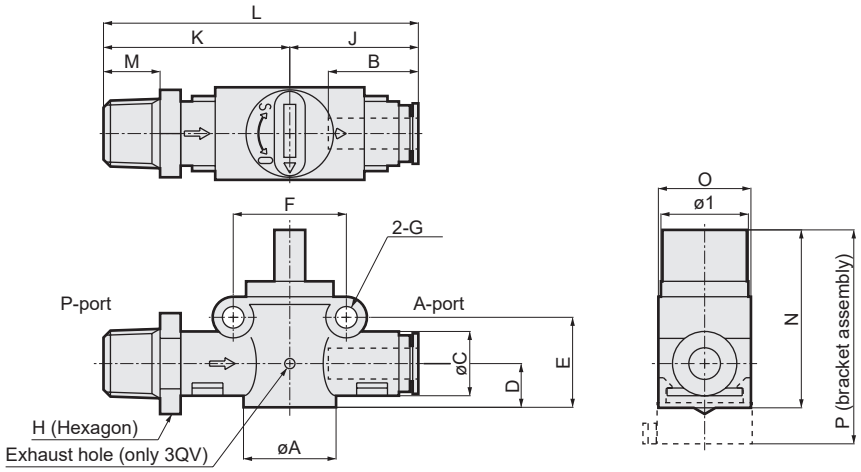

Port thread R	Compatible tube O.D. (mm)	Model No.	A	B	C	D	E	F	G	H	I	J	K	L	M	N	O	P	Weight	Eff. X-sectional area (mm²)	
P-port	A-port																		(g)	P→A	A→R
1/8	ø4	2/3QV-6A-04	18	16	12.5	8.5	17.5	22	4.2	14	17	25	33.5	58.5	8	34.5	18	41.5	26	4.2	1.8
1/8	ø6	2/3QV-6A-06		17.5															32	9.3	
1/4	ø6	2/3QV-8A-06								17			38	63	11				35	9.3	
1/4	ø8	2/3QV-8A-08S		19	14.5							26.5		64.5					40	10.2	
3/8	ø8	2/3QV-10A-08	22	19	17.5	10.7	22.8	26.5	4.2	17	17	31.5	44.5	76	12	39.8	22	46.8	57	16.3	4.0
3/8	ø10	2/3QV-10A-10		21.5						19									63	21.4	
1/2	ø10	2/3QV-15A-10								22			47.5	79	15				76	21.4	
1/2	ø12	2/3QV-15A-12		23	20.0							33	49	82					85	21.4	

* Tolerance of effective cross-sectional area is ±10%.

Dimensions

● Port size
·P-port (push-in fitting)/A-port (male thread)

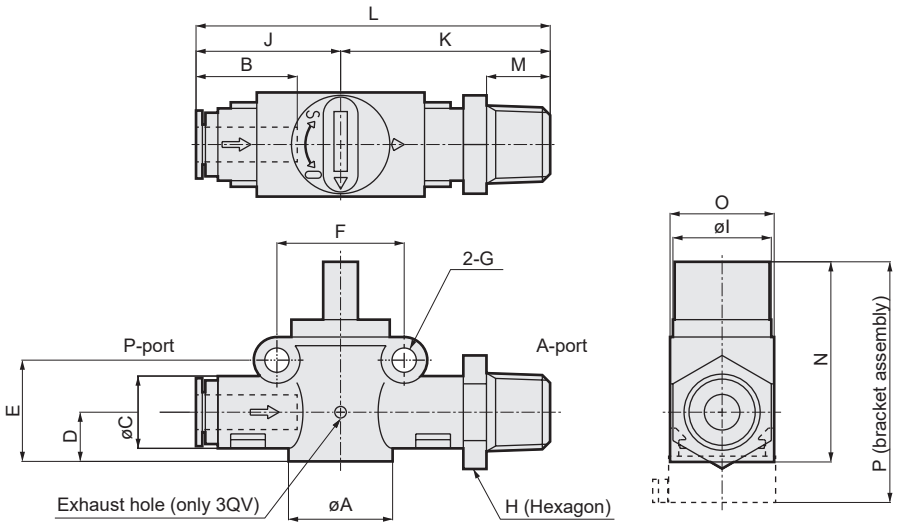

Compatible tube O.D. (mm)	Port thread R	Model No.	A	B	C	D	E	F	G	H	I	J	K	L	M	N	O	P	Weight	Eff. X-sectional area (mm²)	
P-port	A-port																		(g)	P→A	A→R
ø4	1/8	⅔QV-04-6A	18	16	12.5	8.5	17.5	22	4.2	14	17	25	33.5	58.5	8	34.5	18	41.5	26	3.5	1.8
ø6	1/8	⅔QV-06-6A		17.5															32	9.3	
ø6	1/4	⅔QV-06-8A								17			38	63	11				35	9.3	
ø8	1/4	⅔QV-08S-8A		19	14.5							26.5		64.5					40	10.2	
ø8	3/8	⅔QV-08-10A	22	19	17.5	10.7	22.8	26.5	4.2	17	17	31.5	44.5	76	12	39.8	22	46.8	57	15.8	4.0
ø10	3/8	⅔QV-10-10A		21.5						19									63	21.4	
ø10	1/2	⅔QV-10-15A								22			47.5	79	15				76	21.4	
ø12	1/2	⅔QV-12-15A		23	20.0							33	49	82					85	21.4	

* Tolerance of effective cross-sectional area is ±10%.

● Port size
·P-port (male thread)/A-port (male thread)

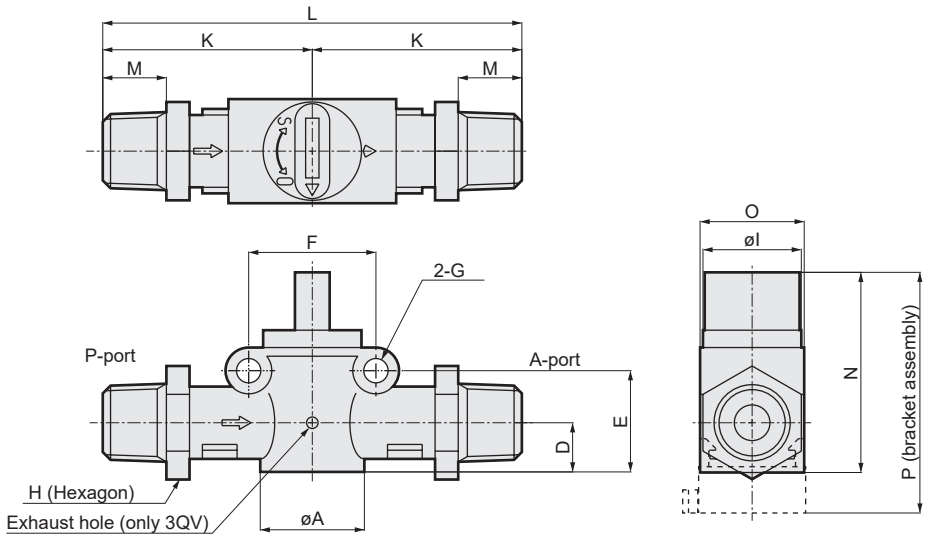

Port thread R		Model No.	A	D	E	F	G	H	I	K	L	M	N	O	P	Weight	Eff. X-sectional area (mm²)	
P-port	A-port															(g)	P→A	A→R
1/8	1/8	⅔QV-6A-6A	18	8.5	17.5	22	4.2	14	17	33.5	67	8	34.5	18	41.5	42	9.5	1.8
1/4	1/4	⅔QV-8A-8A						17		38	76	11				48	9.5	
3/8	3/8	⅔QV-10A-10A	22	10.7	22.8	26.5	4.2	19	17	44.5	89	12	39.8	22	46.8	90	21.4	4.0
1/2	1/2	⅔QV-15A-15A						22		47.5	95	15				116	21.4	

* Tolerance of effective cross-sectional area is ±10%.

Dimensions

● Dedicated bracket

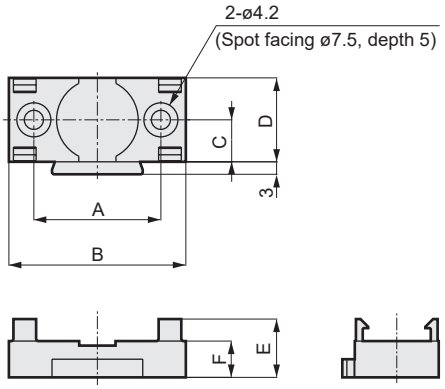

● Mounting pitch dimension for manifold

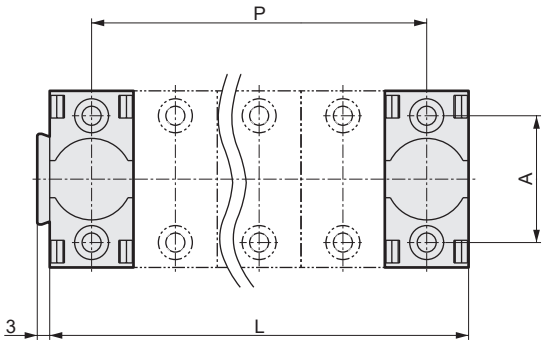

Model No.	A	B	C	D	E	F	P	L	Subject A dimension	Weight g
2QV-P1	28	39	9.25	18.5	13	8	Dx(n-1)	D x n	18	5.4
2QV-P2	32	44	11.25	22.5	12.5	8			22	7.2

n = Station No.

Introduction of custom order product

A quick valve with air lamp is available as a customized order part. Contact CKD for details. Contact CKD for details.
Note: Note that the ø12 diameter is not available.

Specifications

1 MPa = 10 bar

Item	Air lamp
Working fluid	Air
Working pressure MPa	0.05 (≈7.3 psi) to 0.8 (≈120 psi)
Fluid temperature °C	0 (32°F) to 60 (140°F)
Ambient temperature °C	0 (32°F) to 60 (140°F)
Display color	Red, green

Applications
·Cylinder residual pressure exhaust

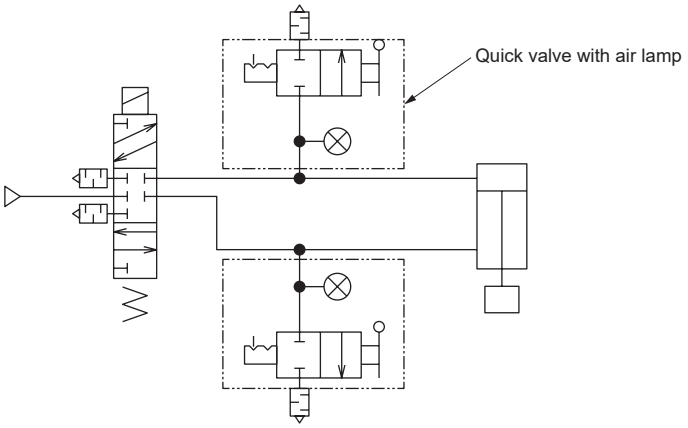

Example of assembly

● When using 2QV-06-06 with air lamp

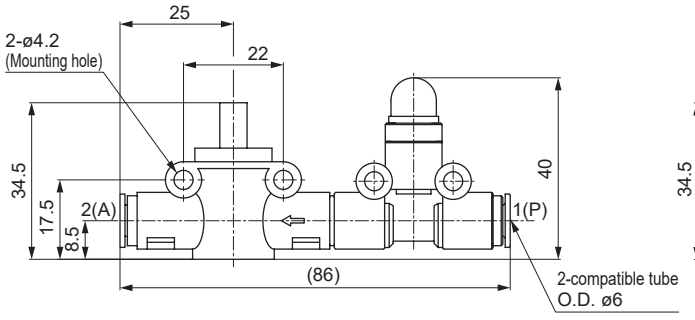

● When using 2QV-08S-08S with air lamp

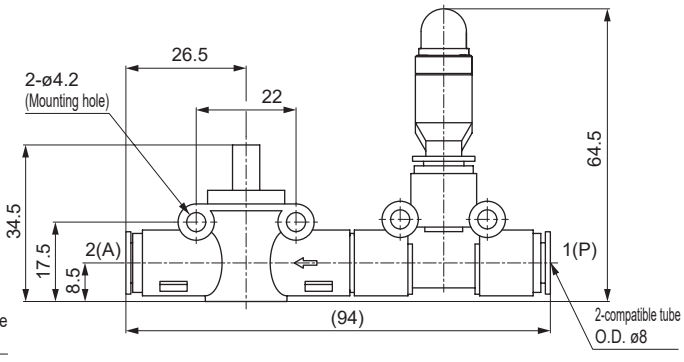

● Types 3QV-06 to 10 with air lamp are also available. Contact CKD for details.