

Compact mechanical valve

MS Series

This compact 3-way valve for pneumatic control is equivalent to a micro switch for electric devices and operates with mechanical detection or manual operation.

● Port size: Rc1/8, ø4

RoHS CAD

Common specifications

Item	MS-00 Normally closed	MS-01 Normally closed	MS-10 Normally open	MS-11 Normally open
Working fluid	Compressed air			
Valve structure	Poppet valve			
Min. working pressure MPa	0 (≈0 psi, 0 bar)			
Max. working pressure MPa	0.8 (≈120 psi, 8 bar)			
Proof pressure MPa	1.2 (≈170 psi, 12 bar)			
Port size	Rc1/8	ø4	Rc1/8	ø4
Effective cross-sectional area mm^2	2.5	1.6	2.5	1.6
Ambient temperature °C	5 (41°F) to 60 (140°F)			
Fluid temperature °C	5 (41°F) to 60 (140°F)			

Note: A normally open valve is a made-to-order product.

How to order

MS – 0 0 – PP

- Ⓐ Pressurization
- Ⓑ Connection port
- Ⓒ Type of operation actuator

Code	Description
Ⓐ Pressurization	
0	Normally closed valve
1	Normally open valve (made-to-order product)
4	4-way valve
Ⓑ Connection port	
0	Rc1/8 thread
1	Push-in fitting ø4
Ⓒ Type of operation actuator	
PP	Pin plunger
RL	Roller lever
RLOW	One way roller lever
RP	Roller plunger
SP	Straight plunger
TG	Toggle switch
PB1-*1	Pushbutton valve
ESP-*2	Mushroom valve
SE1	Select valve
SE2	Select valve (2-station type)
***1 For push button type color code (PB1)**	
Blank	Black, green, and red are contained. Make a selection depending on the color to be used.
Y	Yellow
***2 For mushroom color code (ESP)**	
B	Black
G	Green
R	Red
Y	Yellow

Piping connection method

For piping connection, either taper female thread Rc1/8 connection for a pipe or quick connection for an O.D. ø4 tube is selected based on the application.

● MS-00-□ taper female thread Rc1/8 for pipe

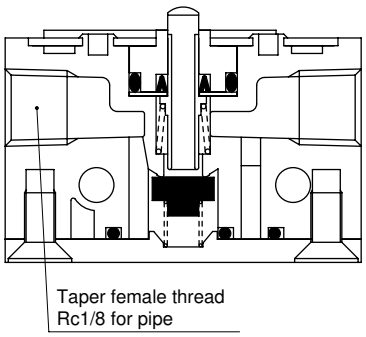

● MS-01-□ push-in fitting for O.D. ø4 soft nylon

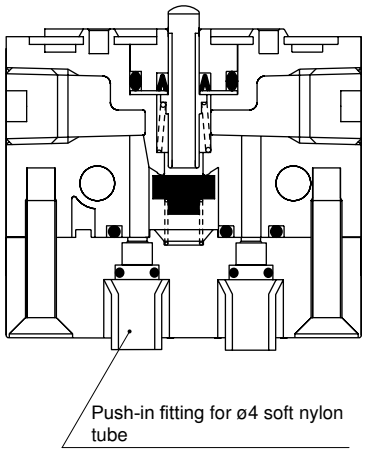

MS-00 is a taper female pipe thread Rc1/8 connection.
· General purpose connection is possible.
· Larger flow rate than MS-01.

MS-01 is a push-in fitting for O.D. ø4 soft nylon.
· Connection is made by simply inserting a soft nylon tube, so plumbing time is reduced significantly.
· Connecting bracket is not required. Therefore, there is no need to consider the extra space for a bracket.

Operational explanation drawing

Not operating

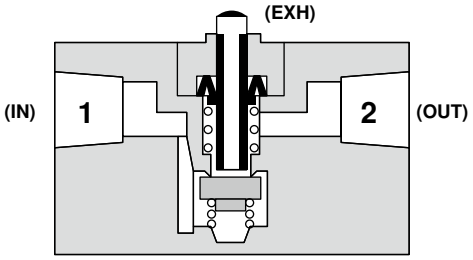

Operating

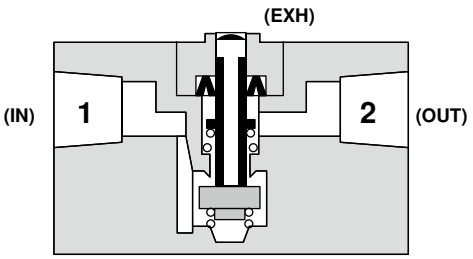

Note) Pressurization in the reverse direction (pressurized from Port 2) is not possible.

Internal structure and parts list

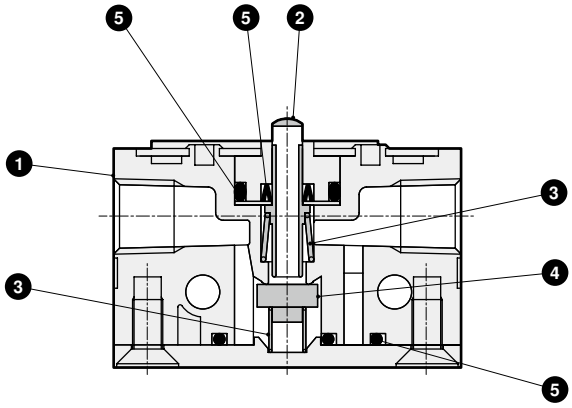

No.	Part	Material
1	Body	Zinc alloy
2	Spool	Stainless steel
3	Spring	Stainless steel
4	Valve	Nitrile rubber
5	Gasket	Nitrile rubber