Specifications

Items		Description
Type of valve and operation method		Pilot operated soft spool valve
Using fluid		Compressed air
Max. working pressure	MPa	0.7
Min. working pressure	MPa	0.2
Resist pressure	MPa	1.05
Ambient temperature	°C	-5 to 55 (no freezing)
Fluid temperature	°C	5 to 55
Manual override		Locking/non-locking common type (Standard)
Lubrication Note 1		Not required
Protective structure Note 2		Dust proof
Resist vibration	m/s^2	50 or less
Resist impact	m/s^2	300 or less
Working environment		Not subject to corrosive gas, etc.
Mass Note 3	g	180

Note 1: Use the turbine oil Class ISO VG 32 if lubricated. Excessive or intermittent lubrication results in instable operation.
Note 2: Check that water drops or oil, etc., do not come into contact.
Note 3: It is in case of 4GE210R-H6-E2-FL639941-3.

Electric specifications

Items			Description
Rated voltage	V	DC	12, 24
		AC	100
Rated voltage fluctuation range			±10%
Holding current	A	DC24V	0.017
		DC12V	0.034
		AC100V	0.009
Power consumption	W	DC24V	0.4
		DC12V	0.4
Apparent power	VA	AC100V	0.98
Heat poof class			B
Surge suppressor		DC	Zener diode
		AC	Diode
Indicator			LED

JIS symbol (example: 4GE210R)

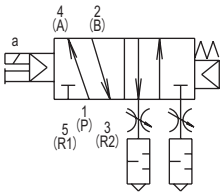

Cylinder operating time

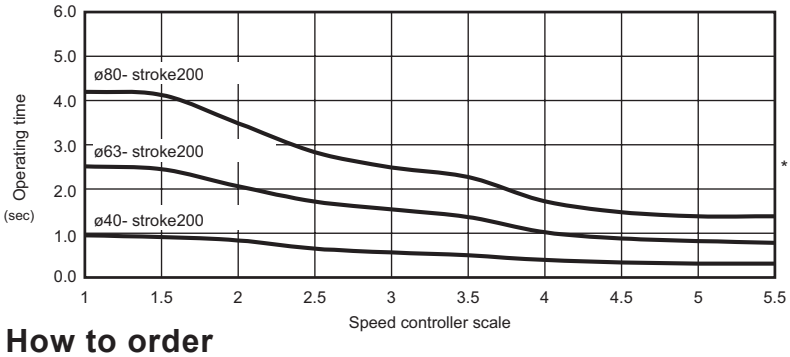

Conditions
SCA2, no load,
vertical, piping tube
ø6-1 m 0.5MPa

* The cylinder operating time is the data from a test in our company. It does not indicate a guaranteed performance range.

How to order

4GE2 [1] 0R - [H6] - [E2] [ ] - [FL639941] - [3]

Model No. Ⓐ Solenoid position

Code	Description
Ⓐ Solenoid position	
1	2 position single
2	2 position double
3	3 position all port closed
4	3 position A/B/R connection
5	3 position P/A/B connection

Ⓑ Port size (P, A, B port)

Ⓑ Port size (P,A,B port)	
H6	ø6 push-in joint
H8	ø8 push-in joint
HL6	ø6 Elbow joint
HL8	ø8 Elbow joint

Ⓒ Electrical connections

Ⓒ Electrical connections		
E shaped connector (axial/ radial)		
E2	Lead wire (300 mm)	With surge suppressor, lamp
E20	Lead wire (500 mm)	
E21	Lead wire (1000 mm)	
E22	Lead wire (2000 mm)	
E23	Lead wire (3000 mm)	

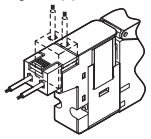

Ⓓ Option

Ⓓ Option	
Blank	Manual override for non lock and lock
P2	With magnet (temporarily attach for installation)

Ⓔ Voltage

Ⓔ Voltage	
1	100VAC (rectified bridge integrated)
3	24VDC
4	12VDC

Cautions

Note: Electrical connections other than the E type are also available. Contact our sales representatives for other specifications and options. (Related catalog No.CC-1087)

Dimensions

● 2 position single

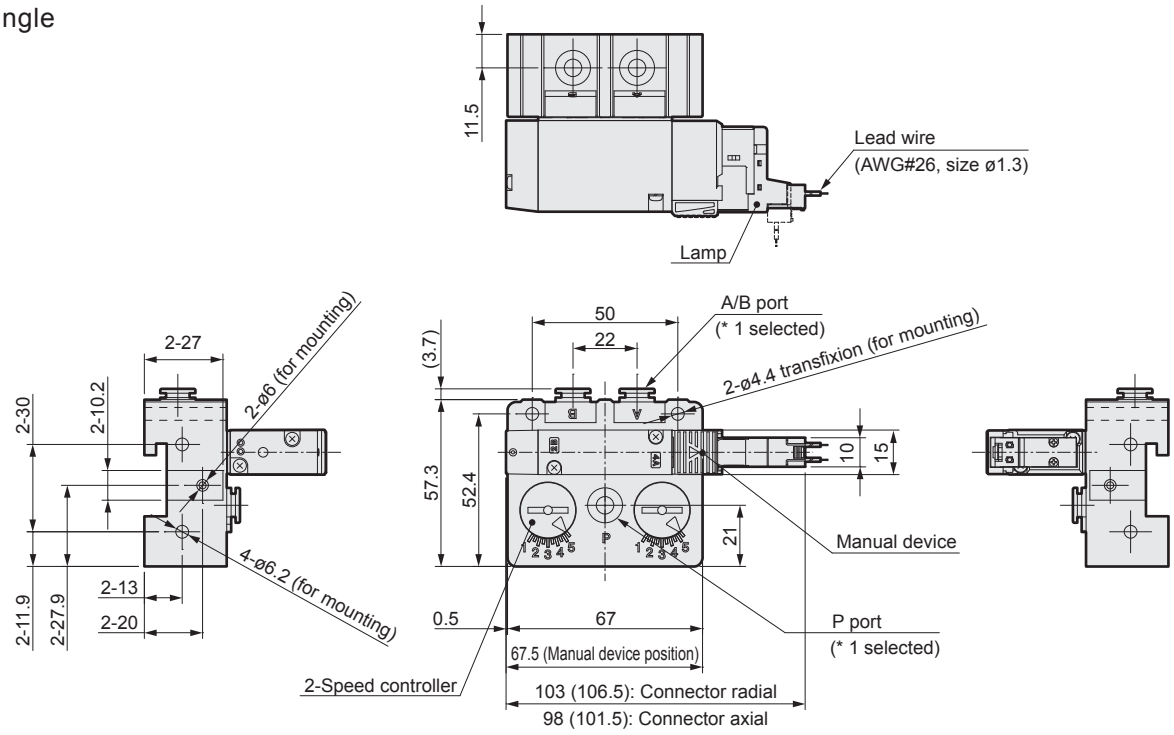

* Figures in ( ) are for 100VAC.

● Joint dimensions when HL6 or HL8 are selected

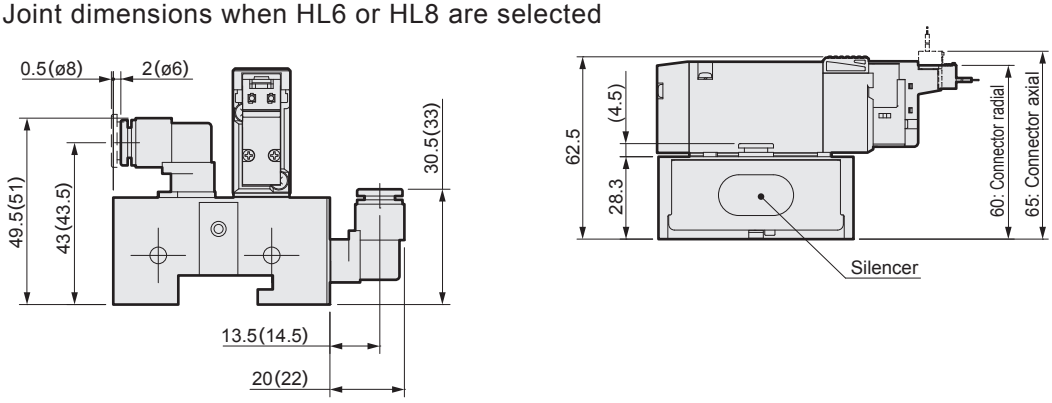

* Figures in ( ) are for HL8.

● 2 position double

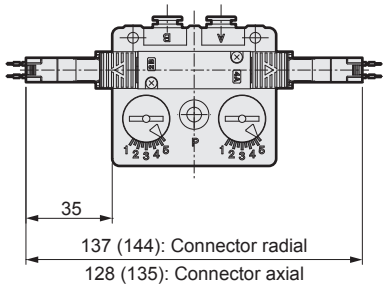

* Inside of ( ) is when AC is 100VAC

● 3 position

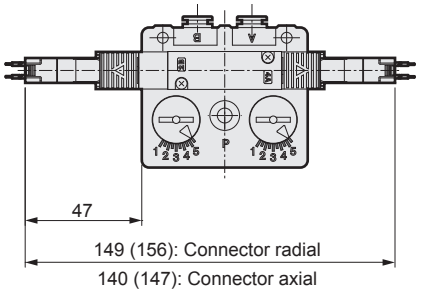

● With magnet (optional)

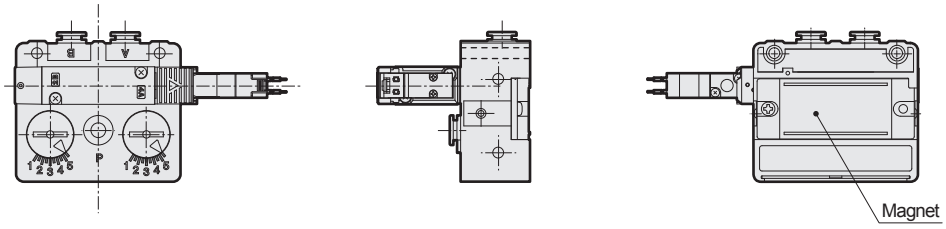

* Temporary attachment during installation