

Material compatible with the Food Sanitation Act

FDA compliant materials

Anti-bacterial/
bacteria-removing filter combination

SFC307/SFC407/SFC807-FP2 Series

●Port size: 1/4 to 1/2

RoHS CAD

Specifications

Item		SFC307	SFC407	SFC807
System components	① Anti-bacterial pre-filter	SFC310	SFC410	SFC810
	② Anti-bacterial high performance filter	SFC320	SFC420	SFC820
	③ Bacteria removing filter	SFC330	SFC430	SFC830
Working fluid		Compressed air, nitrogen gas (N_2) and carbon dioxide (CO_2)		
Working pressure range	MPa	0.1 to 1.0		
Proof pressure	MPa	1.5		
Differential pressure-resistant	MPa	0.5		
Ambient/fluid temperatures	°C	5 to 45		
Filtration rating	μm	0.01 (removal efficiency 99.99%)		
Max. processing flow rate *1	L/min (ANR)	300	500	1100
Port size	Rc, NPT, G	1/4, 3/8	1/4, 3/8, 1/2	3/4, 1
Weight	Kg	0.96	1.61	3.72
Standard accessories		Maintenance label (included)		
Element replacement		1 year (6000 hours) or pressure drop 0.1MPa		

*1: Use within the max. processing flow rate. This is the value when primary pressure is 0.7 MPa.

How to order

SFC307 - 10 - X1 - FP2

Ⓐ Model No.

Ⓑ Port size

Ⓒ Port thread

Ⓓ Flow direction

Code	Description	Ⓐ Model No. SFC307	SFC407	SFC807
Ⓑ Port size				
8	1/4	●	●	
10	3/8	●	●	
15	1/2		●	
20	3/4			●
25	1			●
Ⓒ Port thread				
Blank	Rc thread	●	●	●
N	NPT thread	●	●	●
G	G thread	●	●	●
Ⓓ Flow direction				
Blank	Standard flow (left → right)	●	●	●
X1	Reverse flow (right → left)	●	●	●

●Replacement model No. for single element unit

Element model No. / Model	Anti-bacterial pre-filter element	Anti-bacterial high performance filter element	Bacteria-removing filter element
SFC307	SFC310-ELEMENT	SFC320-ELEMENT	SFC330-ELEMENT
SFC407	SFC410-ELEMENT	SFC420-ELEMENT	SFC430-ELEMENT
SFC807	SFC810-ELEMENT	SFC820-ELEMENT	SFC830-ELEMENT

Dimensions CAD

● SFC307/SFC407

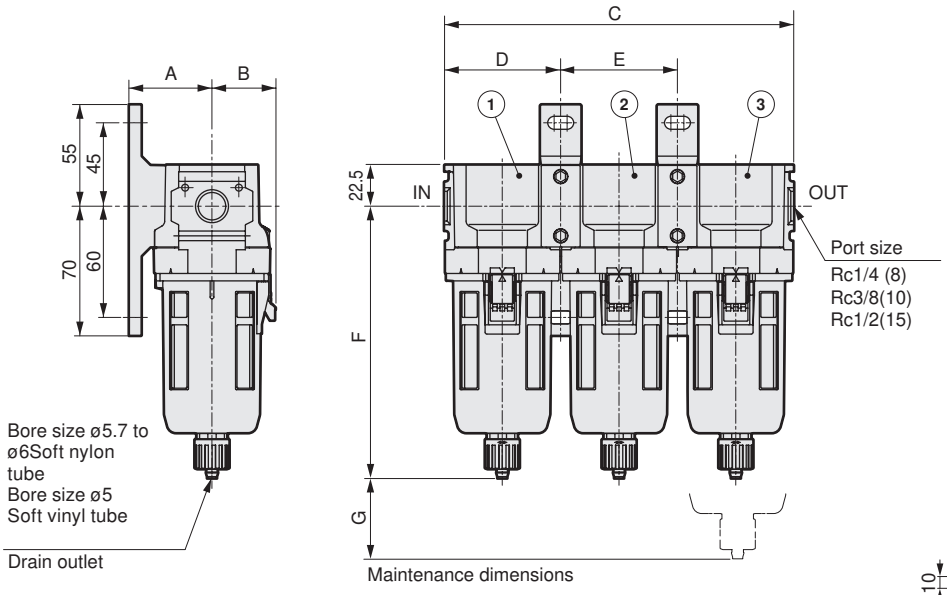

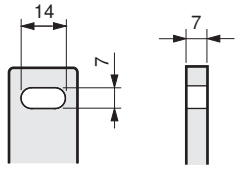

Enlarged view of bracket section

●Attachment
T-bracket
Model No.: SFB310-FP2
(Applicable models: SFC307)
SFB410-FP2
(Applicable models: SFC407)

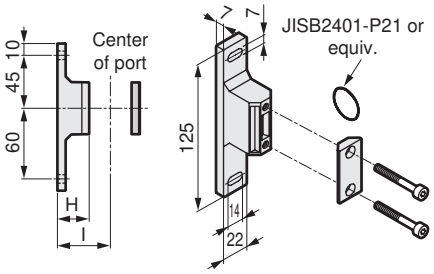

Material:Aluminum die-casting
Stainless steel mounting screws used

No.	Series
①	Anti-bacterial pre-filter
②	Anti-bacterial high performance filter
③	Bacteria removing filter

Model No.	A	B	C	D	E	F	G	H	I
SFC307	45	(34.5)	189	63	63	148	60	27	45
SFC407	55	(42.5)	240	80	80	171	80	37	55

● SFC807

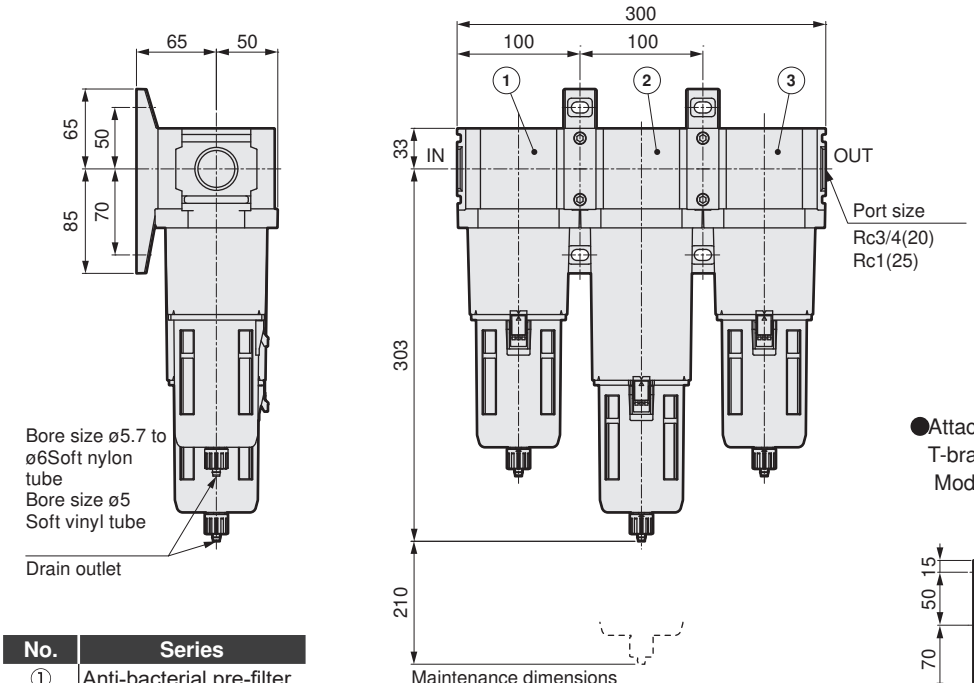

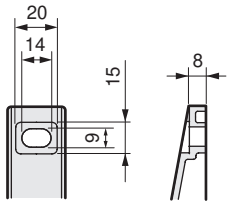

Enlarged view of bracket section

●Attachment
T-bracket
Model No.: SFB810-FP2

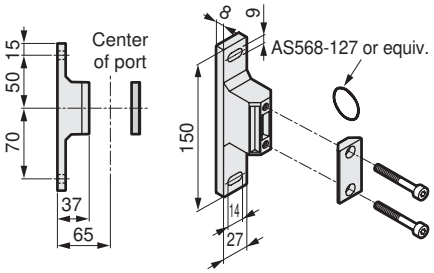

Material:Aluminum die-casting
Stainless steel mounting screws used

No.	Series
①	Anti-bacterial pre-filter
②	Anti-bacterial high performance filter
③	Bacteria removing filter