

Lubricator Outdoor Series

LW4000/LW8000-W Series

Supplies fine oil mist.

● Port size: 1/4 to 1

JIS symbol 

RoHS CAD

Specifications

1 MPa ≈ 145.0 psi, 1 MPa = 10 bar

Item	LW4000-W	LW8000-W
Working fluid	Compressed air	
Max. working pressure MPa	1.0 (≈145 psi, 10 bar)	
Proof pressure MPa	1.5 (≈217 psi, 15 bar)	
Fluid temperature °C	5 (41°F) to 60 (140°F)	
Ambient temperature °C	-10 (14°F) to 60 (140°F) (no freezing)	
Min. drip flow rate *1 m^3/min (ANR)	0.065	
Oil storage capacity cm^3	170	170 (Max. 360) *2
Oil used	Turbine oil Class 1, ISO VG32 (spindle oil cannot be used)	
Port size Rc, NPT, G	1/4, 3/8, 1/2 (3/4 uses an adapter)	3/4, 1 (1 1/4 uses an adapter)
Weight kg	0.45	1.4

*1: The min. drip flow rate is that at which five drops of turbine oil drip per minute at the primary pressure of 0.5 MPa and inlet air temperature of 20 °C. (It cannot be used for dry fog.)

*2: 300 cm^3 or below from the top of the cup window when lubricating from the filling plug.

Flow characteristics

● LW4000-8-W

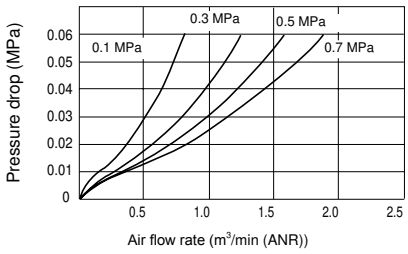

● LW4000-10-W

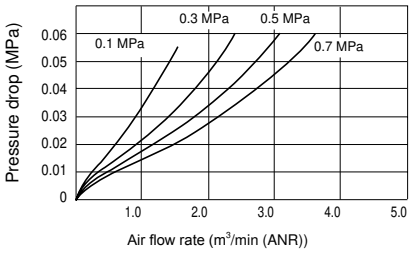

● LW4000-15-W

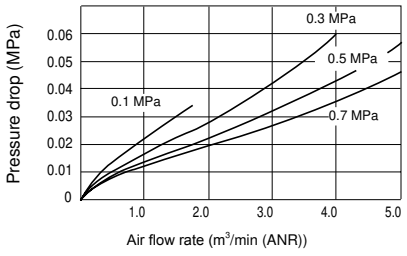

● LW8000-20-W

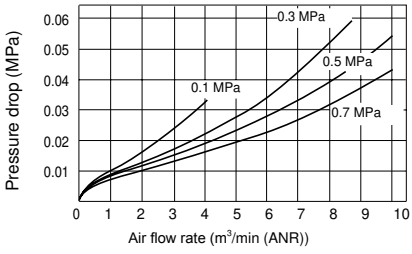

● LW8000-25-W

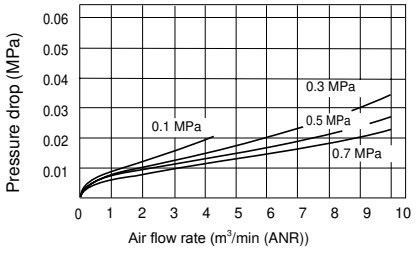

Oil drip rate

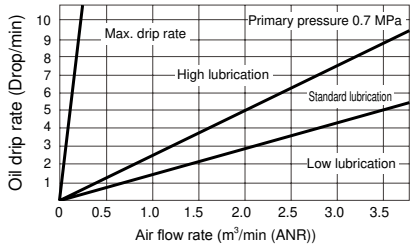

How to order

LW4000 - 8 ○ - W - C - ○

- Ⓐ Model No.
- Ⓑ Port size
- Ⓒ Port thread
- Ⓓ Option
- Ⓔ Bracket (included)

Code		Description	Ⓐ Model No. LW4000	Ⓐ Model No. LW8000
Ⓑ Port size				
8		1/4	●	
10		3/8	●	
15		1/2	●	
20		3/4		●
25		1		●
Ⓒ Port thread			*1 *3	
Blank		Rc thread	●	●
N		NPT thread	●	●
G		G thread	●	●
Ⓓ Option			*2	
Drain discharge	**Blank**	Without manual cock	●	●
	C	With manual cock	●	●
Warranty period	**Blank**	1 year after delivery	●	●
	G	3 years after delivery *4 *5 (with inspection certificate, inspection guidelines, traceability system diagram)	●	●
Flow Direction	**Blank**	Standard flow (left → right)	●	●
	X1	Reverse flow (right → left)	●	●
Ⓔ Bracket (included)			Page 346	
Blank		Not included	●	●
BW		C-bracket	●	●

⚠ Precautions for model No. selection

*1: G and NPT threads are available for IN and OUT.
*2: When selecting options for several items, list options in order from the top.
*3: NPT and G threads are sold for overseas use. Select the Rc thread in the case of those for the Japanese market.
(In the case of those for the Japanese market, the pressure unit must be MPa and temperature display unit must be °C due to the Measurement Act.)
*4: The warranty period of option G is 3 years from the date of delivery or 1 year from initial use.
*5: For option G, the specifications and drawings must be agreed upon.

Internal structure and parts list

● LW4000-W

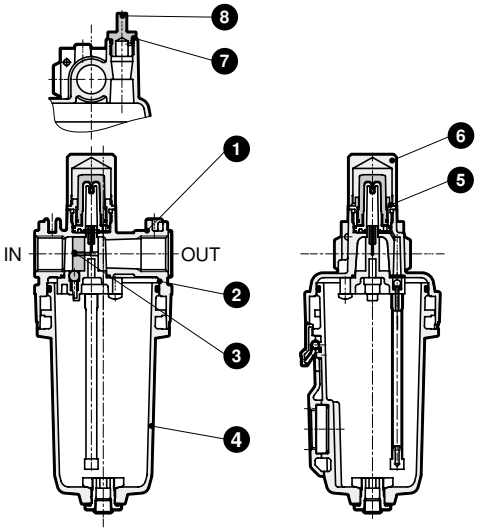

● LW8000-W

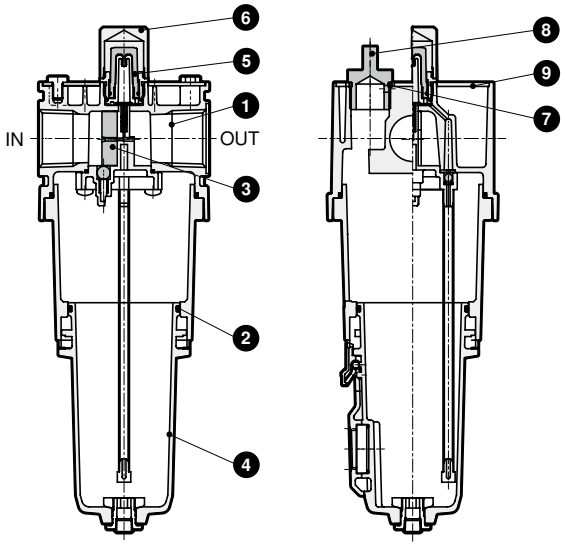

No.	Part name	Material
1	Body	Aluminum alloy die-casting
2	O-ring	Special nitrile rubber
3	Flow guide	Nitrile rubber
4	Metal bowl assembly	Aluminum alloy die-casting, zinc alloy die-casting, stainless steel
5	Adjusting dome assembly	Stainless steel, nitrile rubber, polycarbonate resin
6	Dome cover	Aluminum
7	O-ring	Nitrile rubber
8	Filling plug	Stainless steel
9	Plate cover	Aluminum

Dimensions

● LW4000-W

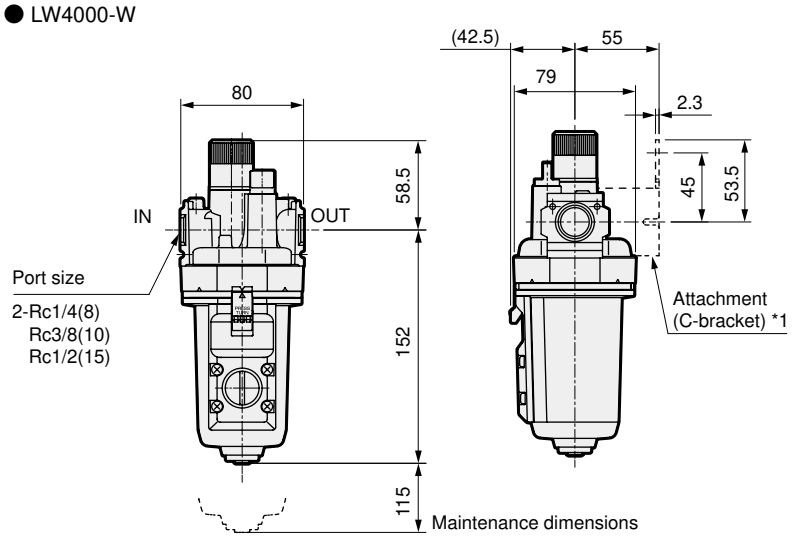

· Optional dimensions
With manual petcock (C)

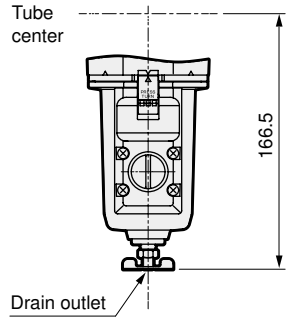

· Attachment
C-bracket (-BW)
Part model No.: B420

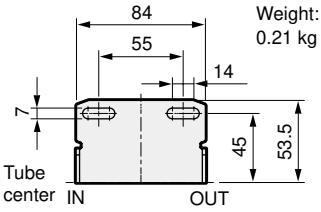

Weight:
0.21 kg

● LW8000-W

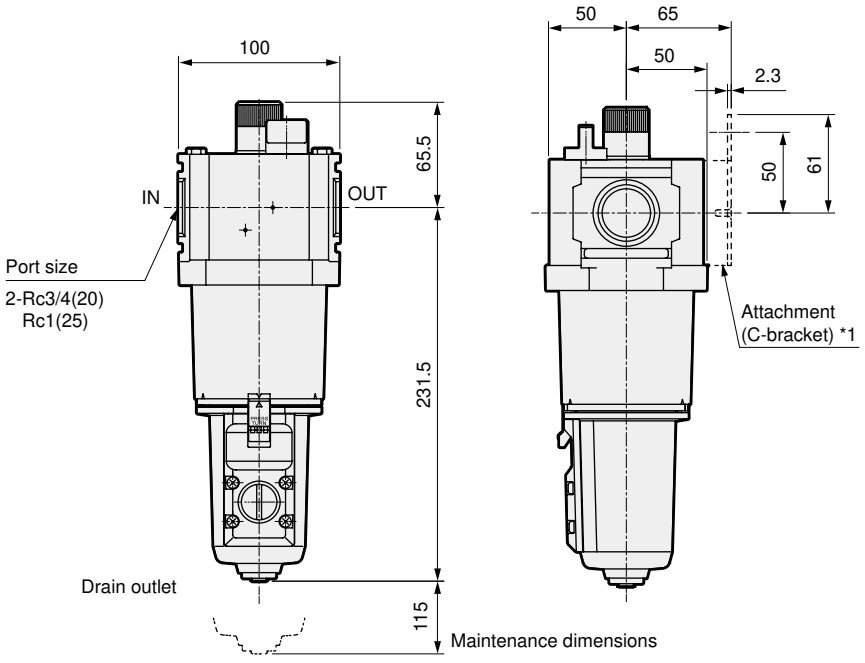

*1: Bracket is optionally included.

· Optional dimensions
With manual petcock (C)

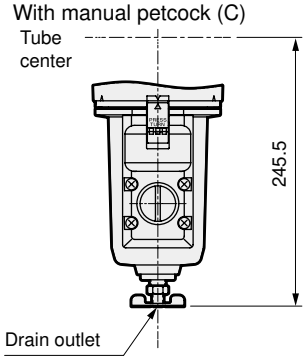

· Attachment
C-bracket (-BW)
Part model No.: B820

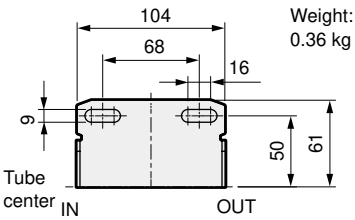

Weight:
0.36 kg