

3-port solenoid valve with spool position detection

SNP Series

● Port size: Rc3/8 to Rc3/4

RoHS CAD

Specifications

Model		SNP		
Port size		Rc3/8	Rc1/2	Rc3/4
Actuation		NC (normally closed) type		
Fluid pressure supply port		P-port		
Working fluid		Compressed air		
Proof pressure	MPa	1.05 (≈150 psi, 10.5 bar)		
Working pressure range	MPa	0.2 (≈29 psi, 2 bar) to 0.7 (≈100 psi, 7 bar)		
Fluid temperature	°C	5 (41°F) to 60 (140°F)		
Ambient temperature	°C	-5 (23°F) to 60 (140°F)		
Weight	kg	0.8(1.7) *1		1.8(3.7) *1
Orifice size	mm	14.8 or equiv.		25.4 or equiv.
Valve seat leakage		1 or less (at pneumatic pressure 0.2 to 0.7 MPa)		
Valve structure		Internal pilot balance poppet structure		
Mounting orientation		Unrestricted		

*1: Values in ( ) are the weight for modules

Electrical specifications			
Rated voltage	(*2)	100 VAC (50/60 Hz) / 110 VAC (60 Hz), 200 VAC (50/60 Hz) / 220 V (60 Hz), 24 VDC	
Apparent power (VA)	When holding	3.6 (50 Hz),2.8 (60 Hz)	
	When starting	11 (50 Hz),9 (60 Hz)	
Power consumption (W)	AC	1.9 (50 Hz),1.5 (60 Hz)	
	DC	2.0	
Thermal class		B	
Degree of protection (IEC Standard 529)		DIN terminal box (Pg 9)	IPX5
		DIN terminal box (M12-4P connector)	

*2: The voltage range must be within ±10% of the rated voltage.
*3: Contact CKD for details on reliability data (B10).

Limit switch specifications

Limit switch specifications		
Manufacturer Model	D4N-1B31	D4N-9B31
Terminal	Pg13.5	M12-4P connector
Contact resistance	25 mΩ or less	
Minimum applicable load	5VDC 1 mA resistance load	
Rated insulation voltage V	300	
Insulation resistance MΩ	100	
Electric shock protection class	Class II	
Pollution degree (working environment)	3 (EN60947-5-1)	
Conditional short-circuit current A	100	

* Refer to the manufacturer's catalog for details.

Flow characteristics

Model No.		P→A		A→R	
		C[dm³/(s/bar)]	S(mm²)	C[dm³/(s/bar)]	S(mm²)
Single unit	SNP-10A	13	64	14	70
	SNP-15A	15	76	16	80
	SNP-20A	34	170	36	180
2 stations	SNP-10A	10	50	14	70
	SNP-15A	12	59	16	80
	SNP-20A	26	130	36	180

How to order

SNP - 1R - 15A - 0 2HS L B3 S1 - 1

Ⓐ Station No.
Ⓑ Port size
Ⓒ Sealant
Ⓓ Coil option
Ⓔ Limit switch
Ⓕ Bracket
Ⓖ Silencer
Ⓗ Voltage

Code	Description
Ⓐ Station No.	
1R	Single unit (terminal box right-facing)
1L	Single unit (terminal box left-facing)
2	2 (2 modules)
Ⓑ Port size	
10A	Rc3/8
15A	Rc1/2
20A	Rc3/4
Ⓒ Sealant	
0	NBR
Ⓓ Coil option	
2G	DIN terminal box
2HS	DIN terminal box with light/surge suppressor
2J	DIN terminal box (M12-4P connector)
2KS	DIN terminal box with light/surge suppressor (M12-4P connector)
Ⓔ Limit switch	
L	Pg13.5 (D4N-1B31: OMRON)
M	M12-4P connector (D4N-9B31: OMRON)

Ⓕ Bracket *1

		10A	15A	20A
Blank	No option	●	●	●
B3	With bracket (2000 Series, 3000 Series)	●	●	
B4	With bracket (4000 Series)	●	●	
B8	With bracket (8000 series)			●

Ⓖ Silencer *2	
Blank	No option
S1	Sintered metal
S2	Resin

Ⓗ Voltage	
1	100 VAC 50 Hz/60 Hz/110 VAC 60 Hz
2	200 VAC 50 Hz/60 Hz/220 VAC 60 Hz
3	24 VDC

Precautions for model No. selection

*1: The bracket can be selected when station No. Ⓐ is "2".
*2: Silencer is attached to the product

[Example of model No.]

SNP-1R-15A-02HSLB3S1-1

Ⓐ Station No. : Single unit (terminal box right-facing)
Ⓑ Port size : Rc1/2
Ⓒ Sealant : NBR
Ⓓ Coil option : DIN terminal box with light/surge suppressor
Ⓔ Limit switch : Pg13.5
Ⓕ Bracket : With bracket
Ⓖ Silencer : Sintered metal
Ⓗ Voltage : 100 VAC 50 Hz/60 Hz

Internal structure and parts list

● SNP-1*-10A/15A

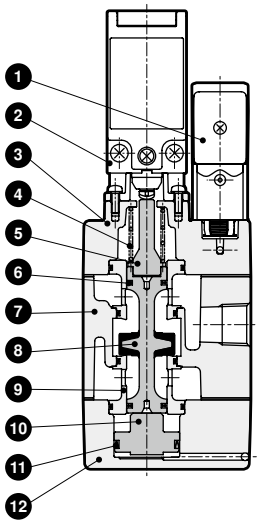

●SNP-1*-20A

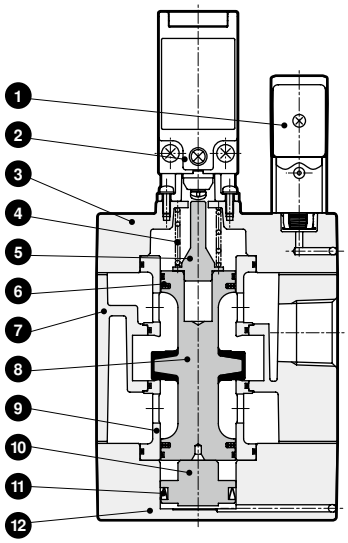

No.	Part name	Material	
1	Pilot solenoid valve	-	
2	Limit switch	-	
3	Body	ADC12	Aluminum die-casting
4	Spring	SWP	Piano wire
5	Indicator	A2017	Aluminum
6	PSD packing	NBR	Nitrile rubber
7	Body	ADC12	Aluminum die-casting
8	Valve stem	NBR,A2017	Nitrile rubber, aluminum
9	Valve seat	A5056	Aluminum
10	Piston	A2017	Aluminum
11	MY packing	NBR	Nitrile rubber
12	Cap	ADC12	Aluminum die-casting

Dimensions

● SNP-1L-10A/15A (single unit)

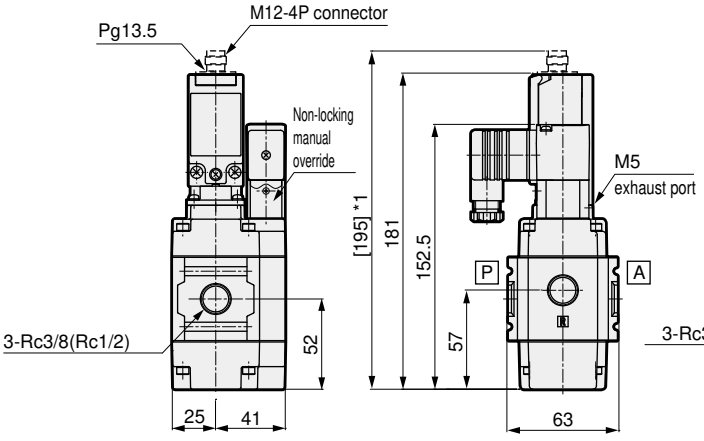

● SNP-1L-20A (single unit)

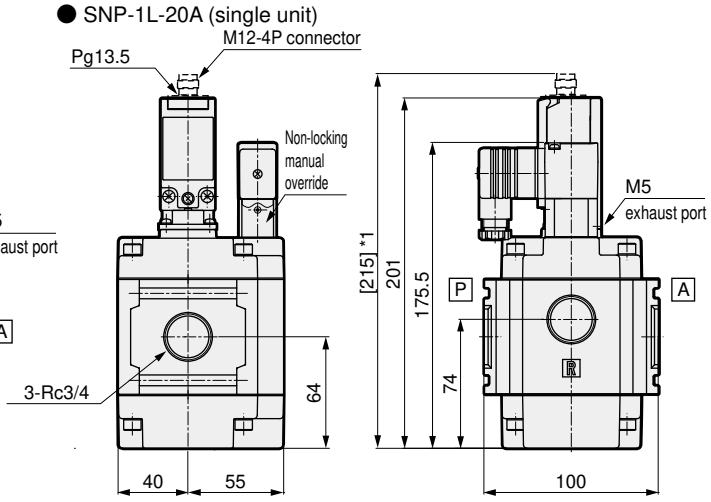

*1: [ ] shows dimensions when M12-4P connector (M) is selected
*2: For 1R, the wiring of the terminal box and limit switch is positioned to the right.

● SNP-2-10A/15A (2 stations)

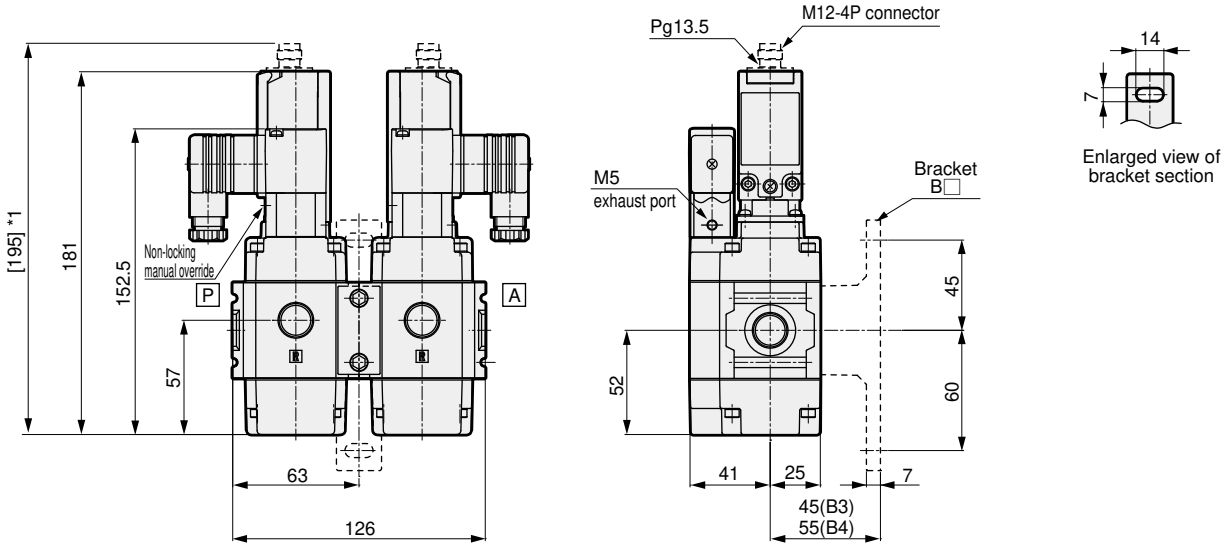

*1: [ ] shows dimensions when M12-4P connector (M) is selected

● SNP-2-20A (2 stations)

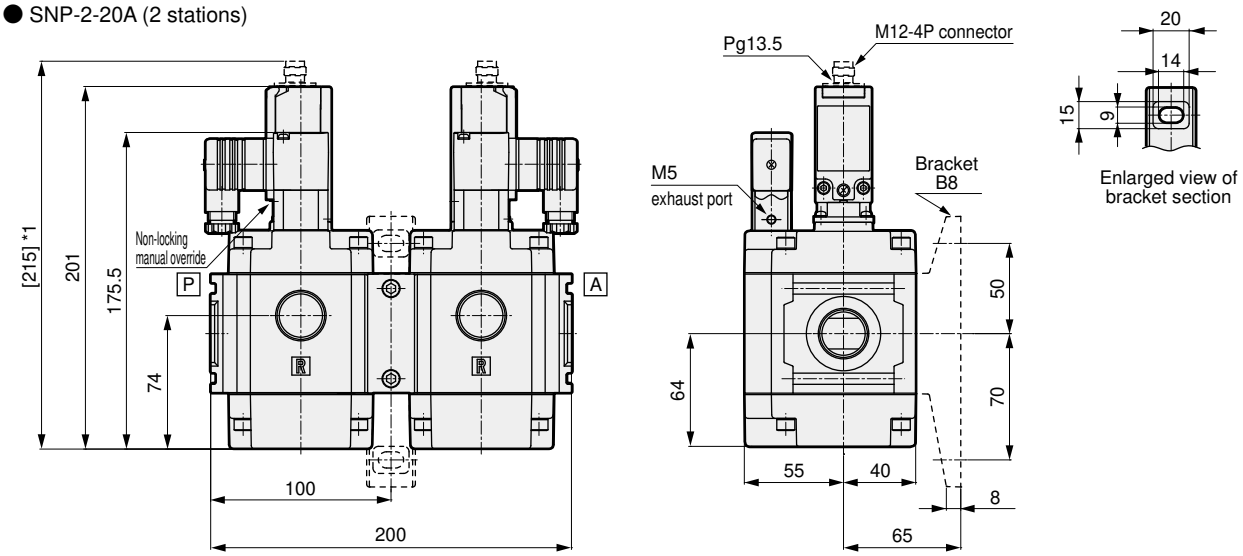

*1: [ ] shows dimensions when M12-4P connector (M) is selected

Option dimensions with silencer

* Silencer is provided with the product.

●SNP-1L-10A-*S1

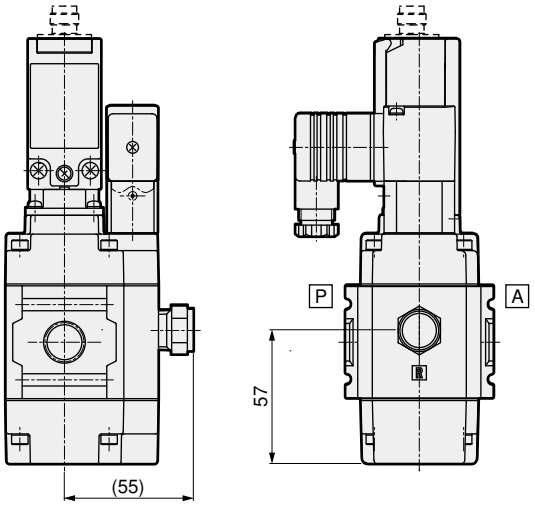

●SNP-1L-10A-*S2

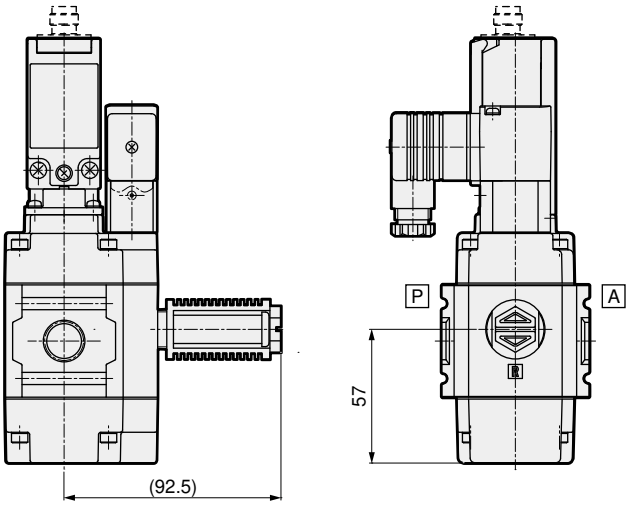

●SNP-1L-15A-*S1

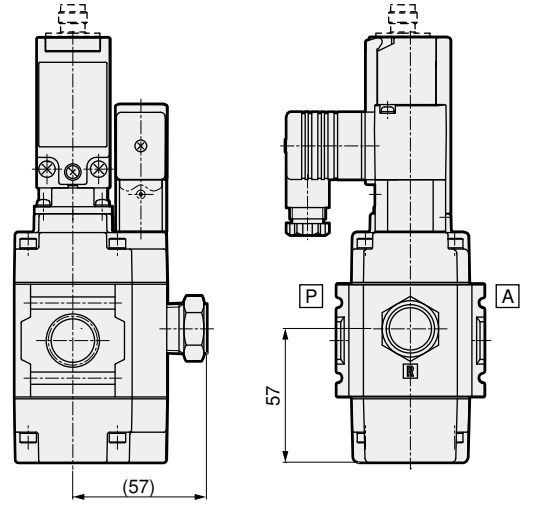

●SNP-1L-15A-*S2

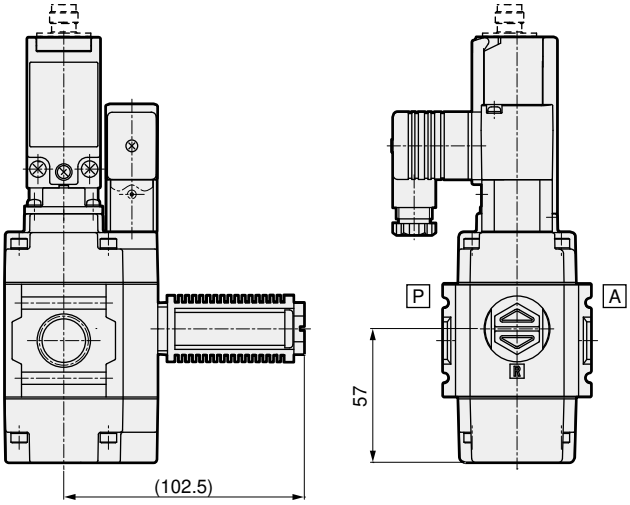

●SNP-1L-20A-*S1

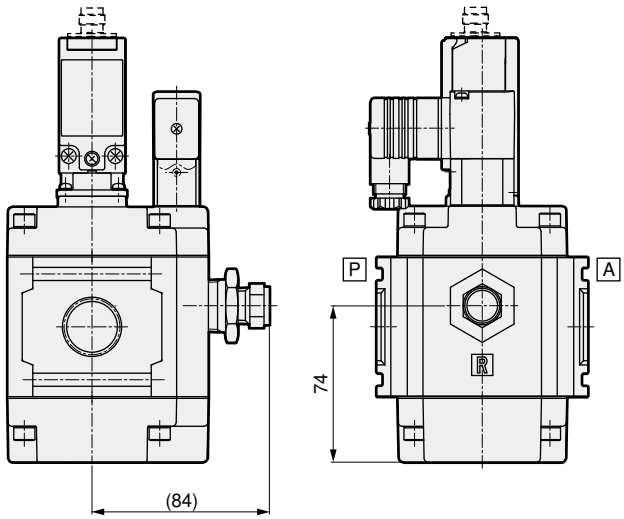

●SNP-1L-20A-*S2

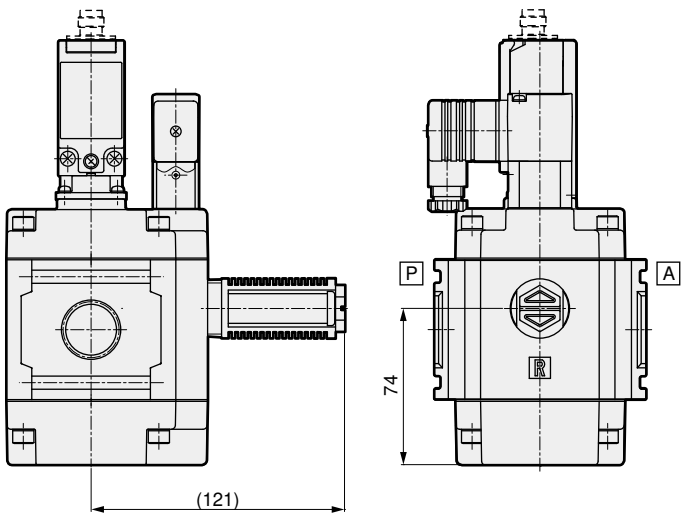

Coil option dimensions

● DIN terminal box (Pg9)
DIN terminal box with lamp/surge suppressor (Pg9)
SNP-* 2G / 2HS

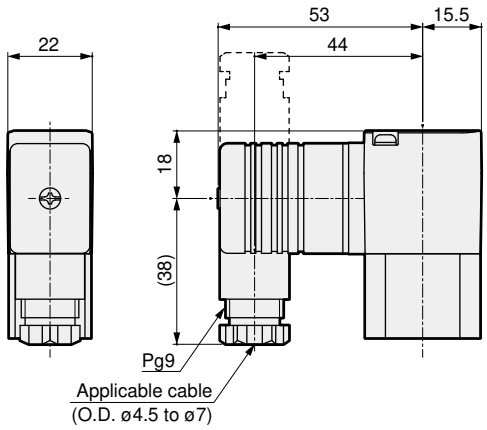

● DIN terminal box (M12-4P connector)
DIN terminal box with lamp/surge suppressor (M12-4P connector)
SNP-* 2J / 2KS

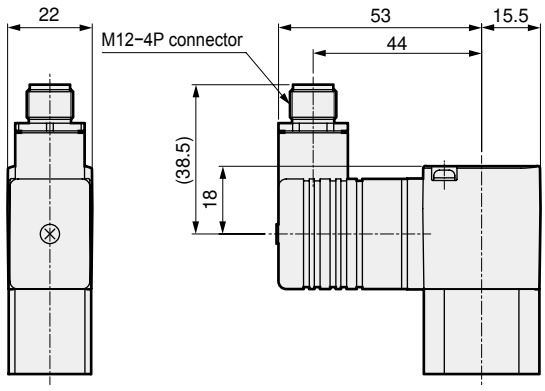

Connector pin array

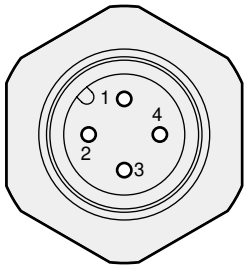

PIN No.	Applications
1PIN	Ground
2PIN	(Not used)
3PIN	Power supply -
4PIN	Power supply +

* As it is a screw-in, the connector pin positions may not be the same as those shown above.