

Air tank(Related products)

AT2 Series

JISCode

Specifications

Item	AT2-05S	AT2-10S
Working fluid	Compressed air	
Max. working pressure MPa	0.99	
Water test pressure MPa	1.5	
Ambient temperature°C	0 to 50 (no freezing)	
Internal capacity L	5	10
Port size	Rc3/8	
Material	Stainless steel	
Weight kg	7.3	10.5

How to order

AT2 - 10 S

Ⓐ Internal capacity

Code	Description
Ⓐ Internal capacity	
05	5L
10	10L

Dimensions

●AT2-05S

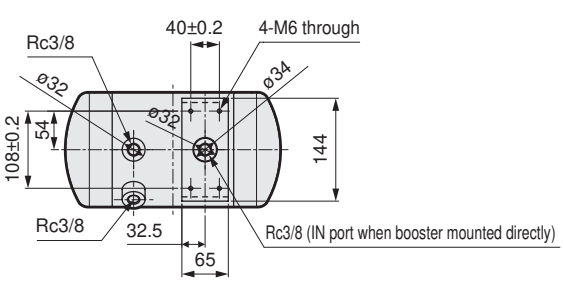

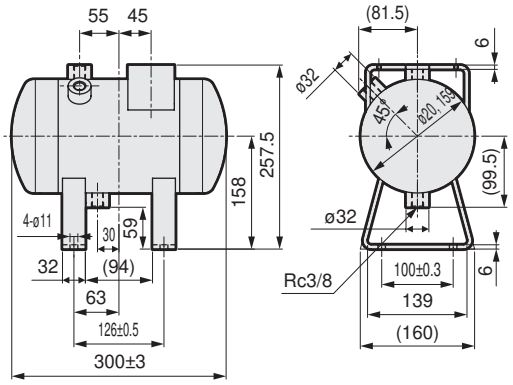

●AT2-10S

