

Metering valve with silencer

SMW2 Series

● Port size: R1/8 to R1/4

JIS symbol 

RoHS CAD

Features

● Compact/lightweight/high flow rate
Volume reduced by 50% and weight reduced by 80% compared with conventional series, while max. effective cross-sectional area in the class is achieved.

● Noise reduction effect 23 dB (A) and over
P.P. sintering element with high damping effect integrated into the body to maintain low noise level.

● Uses a push lock needle
Knob with push lock mechanism enables easy and secure locking.

● Environmental friendly design
By using plastic material only, sorting at disposal is eliminated.

Specifications

Item	SMW2-6A	SMW2-8A
Working fluid	Compressed air	
Max. working pressure MPa	0.7 (≈100 psi, 7 bar)	
Min. working pressure MPa	0 (≈0 psi, 0 bar)	
Proof pressure MPa	1.05 (≈150 psi, 10.5 bar)	
Fluid temperature °C	5 (41°F) to 60 (140°F)	
Ambient temperature °C	-10 (14°F) to 60 (140°F) (no freezing)	
Ambient humidity %RH	85 or less	
Port size R	1/8	1/4
Weight g	4.5	5
Cylinder bore size mm	ø20 to ø50	ø32 to ø75
Dial value (needle position)	9	
Noise reduction effect (*2) dB [A]	23 or more	28 or more
Flow rate (*1) ℓ/min(ANR)	370	660
Effective cross-sectional area mm^2	5.6	9.9

*1: Flow rate is the atmospheric pressure conversion at 0.5 MPa.
*2: Noise reduction effect at maximum flow rate is shown.

How to order

SMW2 - 6A

Code	Description
Ⓐ **Port size**	
6A	R1/8
8A	R1/4

Flow characteristics

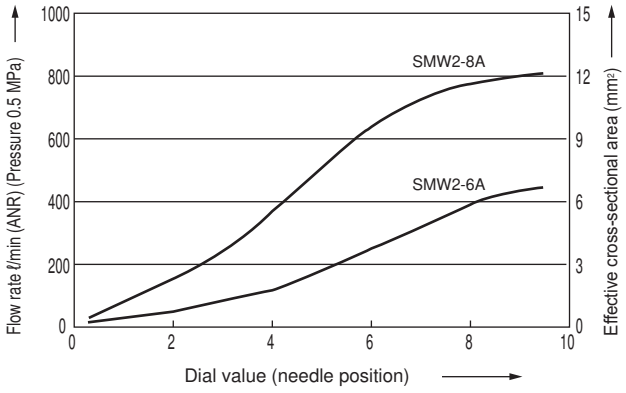

Internal structure and parts list

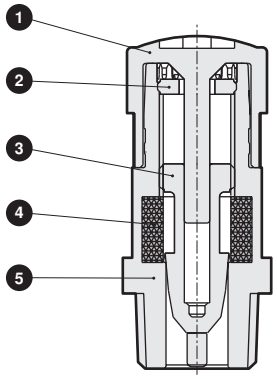

No.	Part name	Material
1	Knob	Polybutylene terephthalate
2	Guide ring	Polyamide
3	Needle	Polyamide
4	Element	PP sintered resin
5	Body	Polyamide

Dimensions CAD

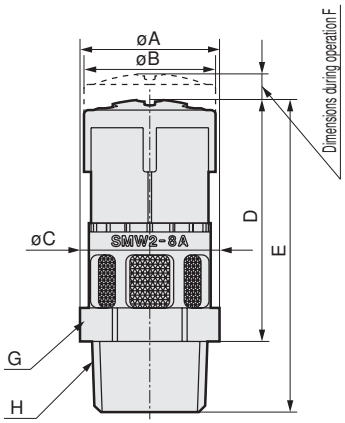

Code / Model No.	A	B	C	D	E	F	G Hexagon	H Port size
SMW2-6A	13.5	14.9	13.8	27.4	35.4	2.9	12	R1/8
SMW2-8A	15.8						14	R1/4

Usage methods

- The needle lock is released when the knob is pulled, and is locked when pressed.
- Pull the knob and release the lock before adjusting the flow rate.
  The knob opens when turned to the right and closes when turned to the left.
- Return the knob to the closed state and gradually open it to adjust speed.
- After adjusting speed, press the knob and confirm that the needle is locked.

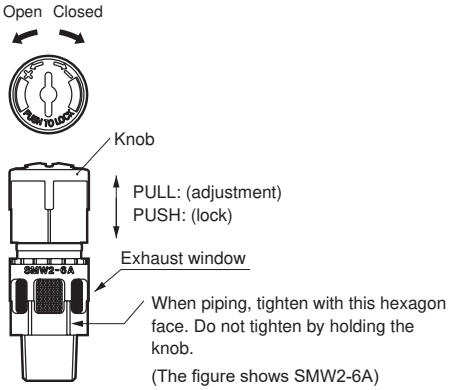

⚠Safety precautions

■ Design/selection

- This valve cannot be used as a stop valve that requires no leakage.
  Slight leakage is allowed for in this product's specifications.
- Depending on air quality (dew point), the exhaust port could freeze due to adiabatic expansion.

■ Mounting, installation and adjustment

- The needle is designed to open and close by turning lightly by hand. Turning the needle too far when fully opened or closed could damage internal parts.
- Return the knob to the closed state and gradually open it to adjust speed. If the needle is opened, the actuator could suddenly and dangerously pop out.
- The tightening torque for the port thread is shown in Table 1. Because screws loosen easily under high temperatures, mount with the upper torque limit (1.0 N·m) when the ambient temperature is 40˚C or more.

Model No.	Tightening torque (N·m)
SMW2-6A	0.5 to 1.0
SMW2-8A	0.5 to 1.0

Table 1 Recommended tightening torque

- When piping, use a tool and tighten with the hexagon face below the exhaust window. Do not tighten or remove pipes with the knob. Internal damage could result.
- Sealant is not applied on thread part. If used in this state, screws do not loosen, but some leakage could result. When using in low speed range, wrap sealing tape around the joint.