

Check valve

CHV2 Series

Completely prevents reverse flow of fluid such as compressed air. Ten types of wide variations.

● Port size: Rc 1/8 to Rc1 1/2

JIS symbol



RoHS CAD

Features

● Wide range of variations
Series are available for piping bore sizes Rc1/8 to Rc1 1/2.
● Compact and lightweight
● Wide range of options
Fluoro rubber specifications and oil-prohibited specifications available as options. An installation bracket is available for small bore sizes.
● Neat shape
● Eco-friendly products, to make recycling easier

Specifications

Model No.	CHV2-6	CHV2-8-J	CHV2-8	CHV2-10-J	CHV2-10	CHV2-15	CHV2-20	CHV2-25	CHV2-32	CHV2-40
Working fluid	Compressed air									
Max. working pressure MPa	1 (≈150 psi, 10 bar)									
Min. working pressure MPa	0.03 (≈4.4 psi, 0.3 bar)									
Proof pressure MPa	1.5 (≈220 psi, 15 bar)									
Cracking pressure MPa	0.02 (≈2.9 psi, 0.2 bar)									
Fluid temperature °C	5 (41°F) to 60 (140°F)									
Ambient temperature °C	0 (32°F) to 60 (140°F) (no freezing)									
Port size Rc	1/8	1/4		3/8		1/2	3/4	1	1 1/4	1 1/2
Weight g	47		81		140		265		875	
Mounting plate weight g	10		15		-					
Effective cross-sectional area mm²	28		55	60	94	110	220	250	700	730

How to order

CHV2 - 8 - J - A P

- CHV2: Model No.
- 8: Ⓐ Port size
- J: Compact small flow rate *1
- A: Ⓑ Option *2
- P: Ⓒ Accessory *3

Code	Description
Ⓐ Port size	
6	Rc1/8
8	Rc1/4
10	Rc3/8
15	Rc1/2
20	Rc3/4
25	Rc1
32	Rc1 1/4
40	Rc1 1/2
Ⓑ Option	
Blank	No option
A	Fluoro rubber specifications
P8	Oil-prohibited specifications
Ⓒ Accessory	
Blank	None
P	With mounting plate

*1: Small flow compact (J) is only for port size Rc1/4 (8) and Rc3/8 (10).
*2: The options are listed in alphabetical order. (AP8)
*3: Mounting plate is available for CHV2-6, CHV2-8-J, CHV2-8 and CHV2-10-J only.

Operational principle

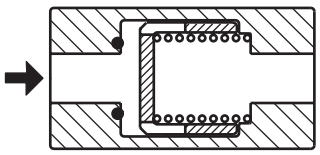

If pressurized in the direction of the arrow from left to right on the side body, the valve fully opens and the flow turns to free flow.

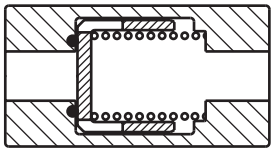

If pressurized in the reverse direction from right to left on the side body, the valve closes and flow is interrupted.

Clean-room specifications (Catalog No. CB-033SA)

● Anti-dust generation structure for use in cleanrooms

CHV2-.....-P7*

CHV2-.....-P80

Internal structure and parts list

● CHV2-6,8-J

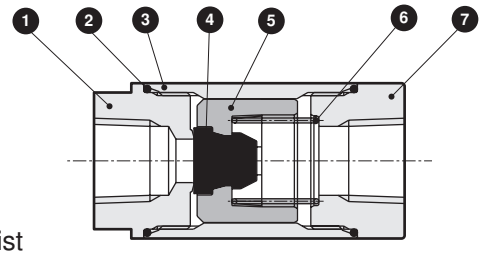

● CHV2-8 to 40

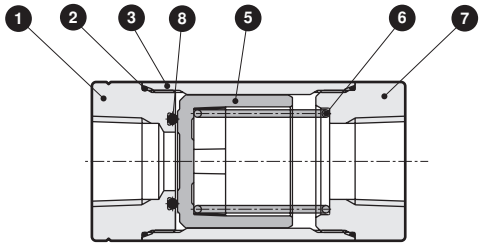

Parts list

No.	Part name	Material	No.	Part name	Material
1	Cover A	Aluminum alloy	5	Valve guide	Polyacetal
2	O-ring	Nitrile rubber (fluoro rubber)	6	Coil spring	Stainless steel
3	Tube	Aluminum alloy	7	Cover B	Aluminum alloy
4	Valving element	Nitrile rubber (fluoro rubber)	8	O-ring	Nitrile rubber (fluoro rubber)

* Materials shown in ( ) are for option “A” (fluoro rubber specifications).

Dimensions

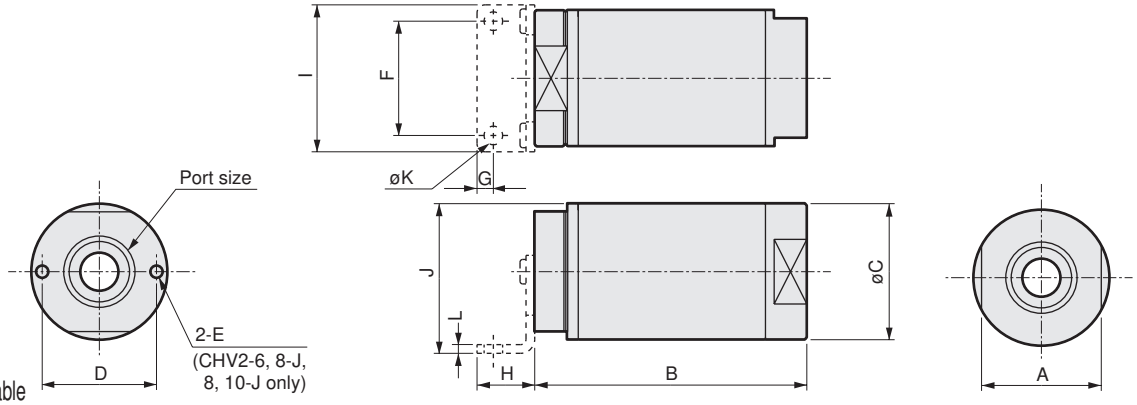

Dimensions table

Model No.	Port size	A	B	øC	D	E	F	G	H	I	J	øK	L
CHV2-6	Rc1/8	22	50	25	21	M2.5	21	3	10.5	27	27.5	3.4	1.6
CHV2-8-J	Rc1/4												
CHV2-8		27	60	31	26	M3	25	5	14	32	34	4.4	
CHV2-10-J	Rc3/8												
CHV2-10		32	75	38	-	-	-	-	-	-	-	-	-
CHV2-15	Rc1/2												
CHV2-20	Rc3/4	42	95	47	-	-	-	-	-	-	-	-	-
CHV2-25	Rc1												
CHV2-32	Rc1¼	63	140	72	-	-	-	-	-	-	-	-	-
CHV2-40	Rc1½												

⚠ Safety precautions

■ Use/maintenance

Installation of CHV2

● After temporarily tightening the mounting port by hand, tighten with a tool on the width across flats.
When connecting the pipe, tighten using the recommended tightening torque.
When removing the piping from this product, use the on the side the width across flats of piping to be removed. If the width across flats on the opposite side is used, the cover could loosen and lead to external leakage.

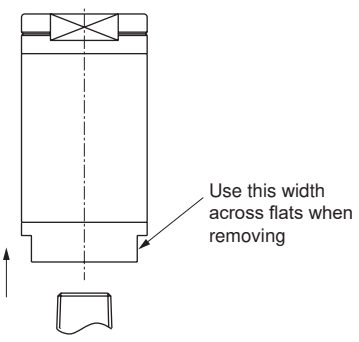

● Check JIS symbols on the product nameplate and pipe accordingly.
If pressure is applied from IN, fluid will flow freely. If pressure is applied from OUT, fluid will be blocked. The side of the cover with a groove is IN, so check the direction when piping.

● Depending on the usage and piping conditions, note that abnormal noise may occur due to chattering when the valving element is not fully closed.