ABSODEX

AX1R

actuator (high precision)



CONTENTS

Product introduction	Intro
Series variation	1
● How to order	5
● Specifications	6
● Dimensions diagram	7
● Speed/Maximum torque characteristics	12
• Related parts	48
• Model selection	51
⚠ Safety precautions	55
Model Selection Specifications Check Sheet	61



ABSODEX

AX1R Series

High accuracy (index accuracy, output shaft runout, etc.)

- Max. torque: 22/45/75/150/210 N·m
- Supported driver: AXD-S/H

How to order

AX1R - 022 N - BS NN

(1) (2) (3)

① Size (max. torque)	
022	22 N·m
045	45 N·m
075	75 N·m
150	150 N·m
210	210 N·m

② Connector mounting direction	
N	Standard (connector horizontal mounting)
D	Connector downward mounting

③ Mounting base *3	
NN	Standard (without mounting base)
BS	With mounting base

* 1: Select the driver according to the compatibility table below.

Driver power voltage compatibility table

Model \ Driver Type	Three-phase/single-phase 200 to 240 VAC	
	AXD-S Type	AXD-H Type
AX1R-022	●	
AX1R-045	●	
AX1R-075	●	
AX1R-150		●
AX1R-210		●

* 2: The calculation of torque limit area is different from usual when used in single-phase 200 VAC. Contact CKD to determine usability.

* 3: The lower surface positioning pin hole cannot be used if the "BS" option for mounting base is selected. The surface is treated with electroless nickel plating.

* 4: Positioning pin holes may not be surface treated.

* Made to order supported products are CE, UKCA, UL/cUL, and RoHS non-compliant.

Actuator specifications

Item		AX1R-022	AX1R-045	AX1R-075	AX1R-150	AX1R-210
Max. output torque	N·m	22	45	75	150	210
Continuous output torque	N·m	7	15	25	50	70
Max. rotation speed	rpm	240 (*1)		140	120	
Allowable axial load	N	600		2200		
Allowable moment load	N·m	19	38	70	140	170
Output shaft moment of inertia	kg·m²	0.00505	0.00790	0.03660	0.05820	0.09280
Allowable moment of load inertia	kg·m²	0.6	0.9	4.0	6.0	10.0
Index accuracy (*4)	sec	±15				
Repeatability (*4)	sec	±5				
Output shaft friction torque	N·m	2.0		8.0		
Resolution	P/rev	540672/2097152 (*2)				
Insulation class		Class F				
Withstand voltage		1500 VAC 1 min.				
Insulation resistance		10 MΩ and over, 500 VDC				
Operating ambient temperature		0 to 40°C				
Operating ambient humidity		20 to 85% RH, no condensation				
Storage ambient temperature		-20 to 80°C				
Storage ambient humidity		20 to 90% RH, no condensation				
Atmosphere		No corrosive gas, explosive gas, or dust				
Weight	kg	8.9 (10.8) (*3)	12.0 (13.9) (*3)	23.0 (27.1) (*3)	32.0 (36.1) (*3)	44.0 (48.1) (*3)
Output shaft runout (*4)	mm	0.01				
Output shaft surface runout (*4)	mm	0.01				
Degree of protection		IP20				

* 1: Use at a speed of 140 rpm or less under the resolution of 2097152 P/rev conditions.
* 2: Shipment status is 540672 P/rev resolution. The resolution can be switched to 2097152 P/rev with the PC software.
* 3: The values in ( ) are the actuator weight with the mounting base option.
* 4: Refer to the "Glossary" on page 54 for index accuracy, repeatability, output shaft runout and output shaft surface runout.

Dimensions

● AX1R-022N

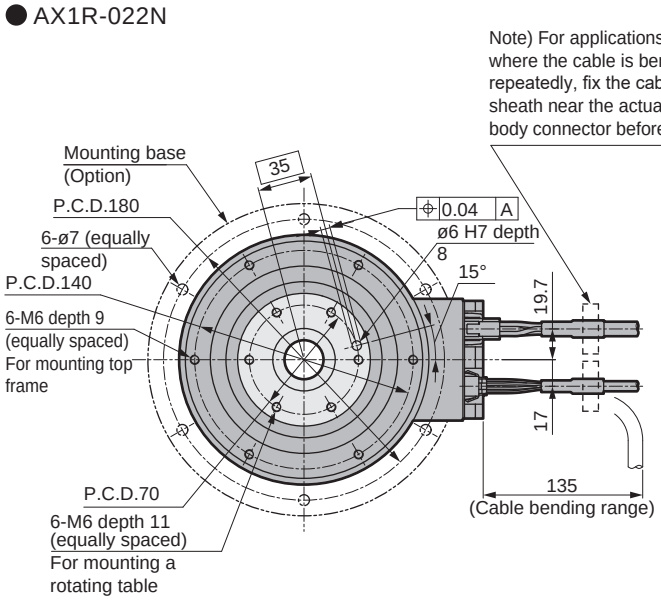

● AX1R-022D

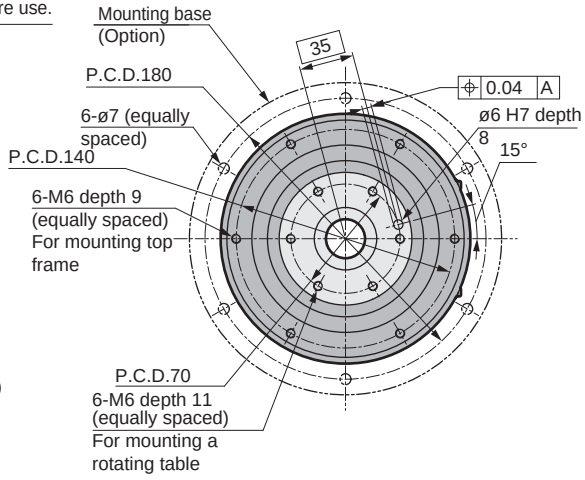

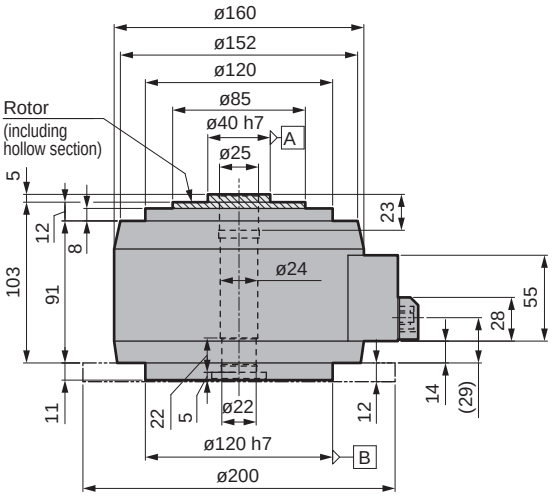

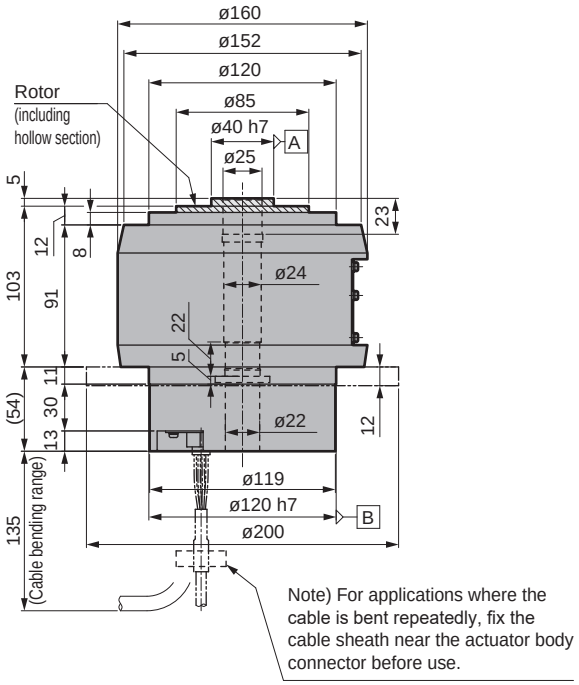

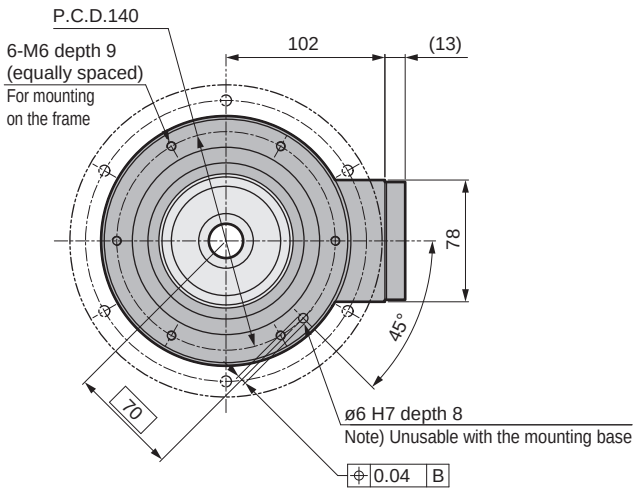

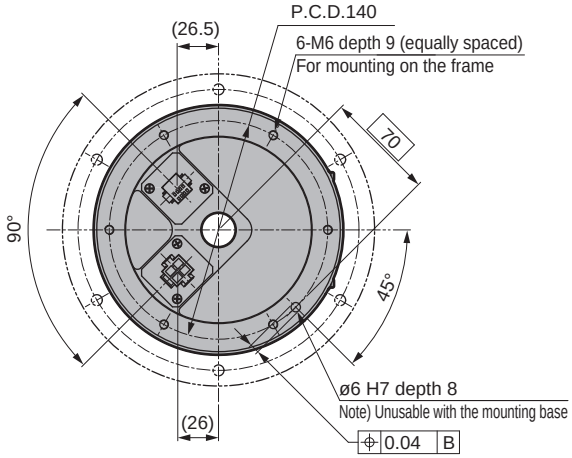

* 1:The actuator origin position may differ from the dimensions. The origin offset function allows you to set an arbitrary home position.

Dimensions

● AX1R-045N

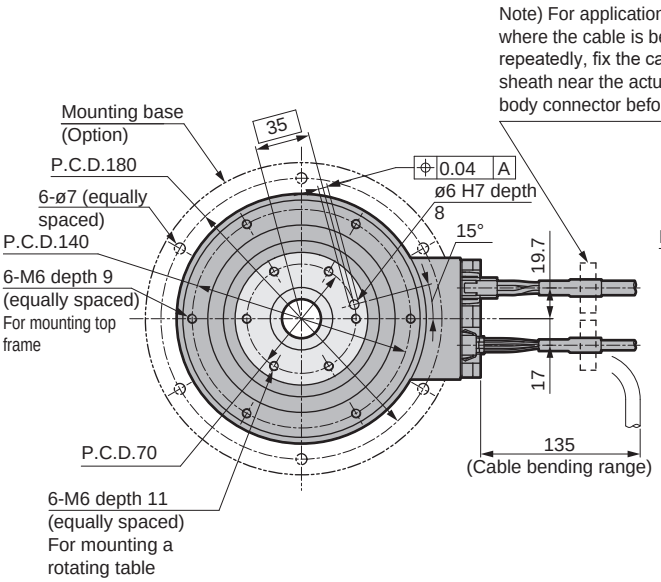

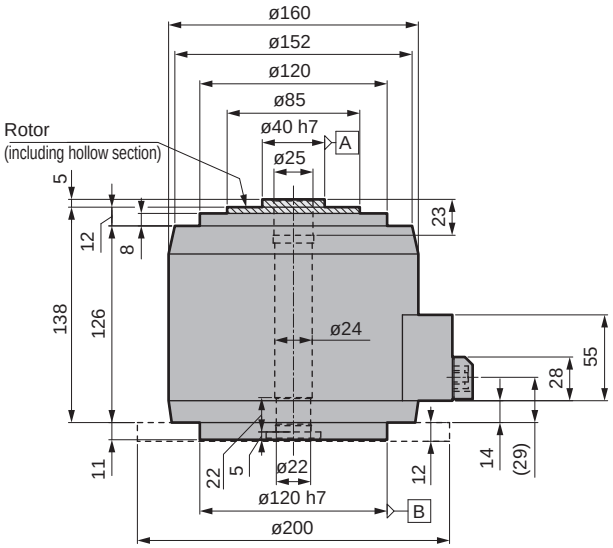

● AX1R-045D

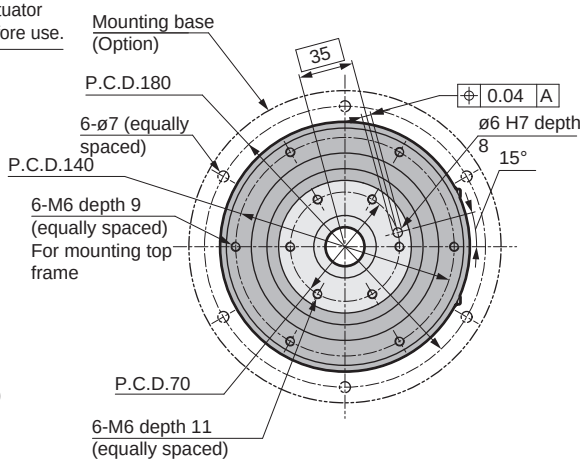

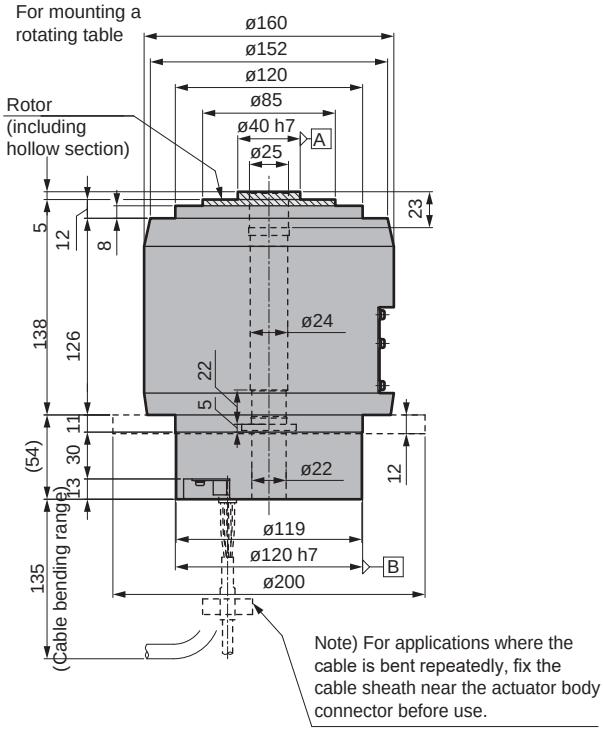

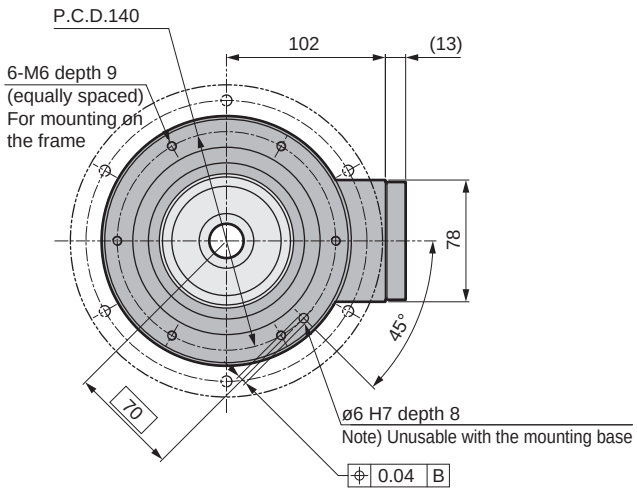

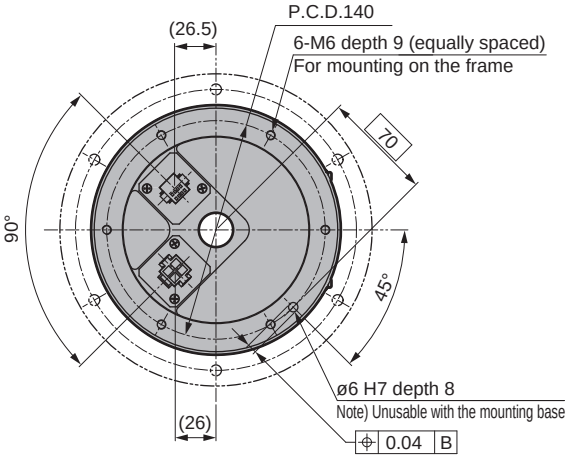

* 1:The actuator origin position may differ from the dimensions. The origin offset function allows you to set an arbitrary home position.

Dimensions

● AX1R-075N

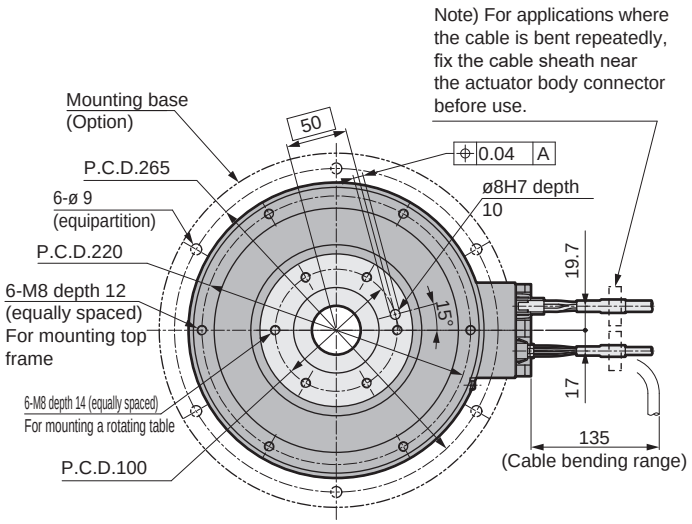

● AX1R-075D

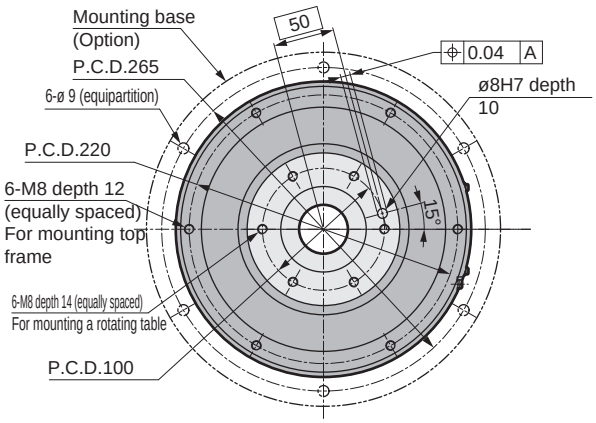

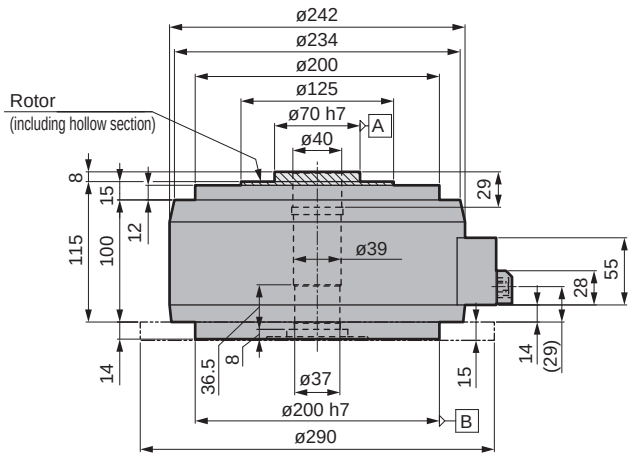

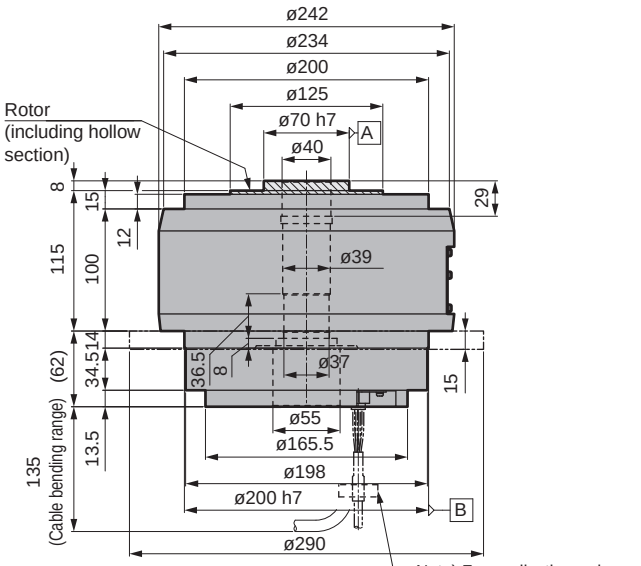

Note) For applications where the cable is bent repeatedly, fix the cable sheath near the actuator body connector before use.

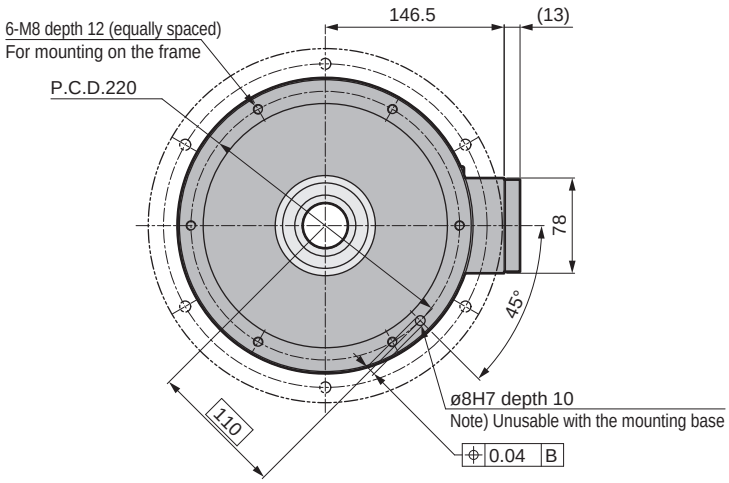

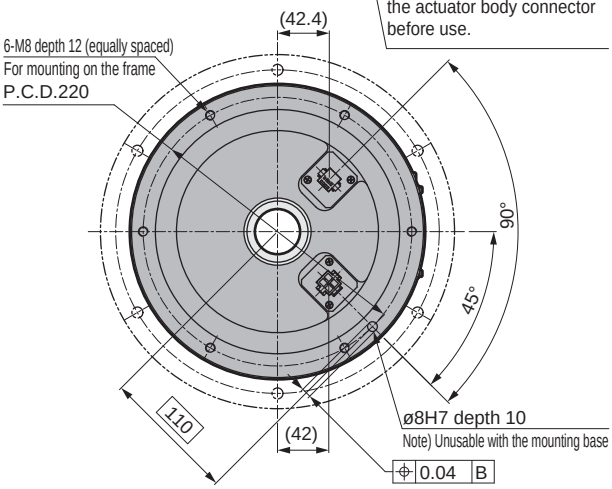

* 1:The actuator origin position may differ from the dimensions. The origin offset function allows you to set an arbitrary home position.

Dimensions

● AX1R-150N

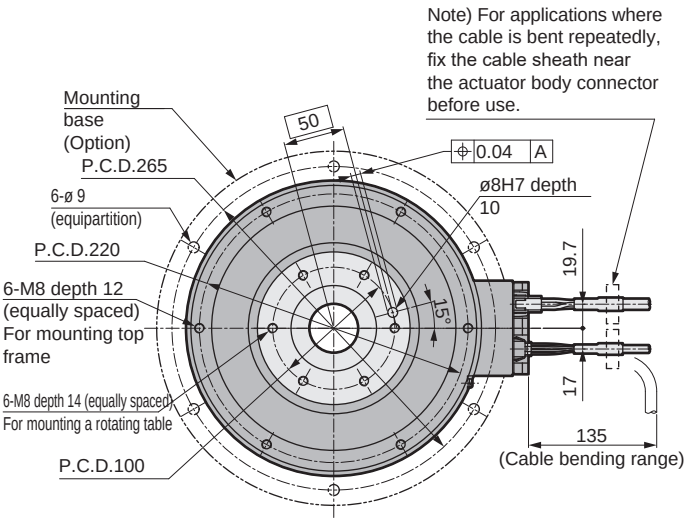

● AX1R-150D

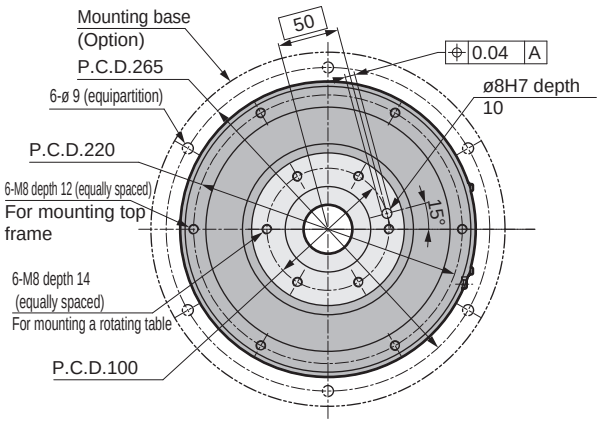

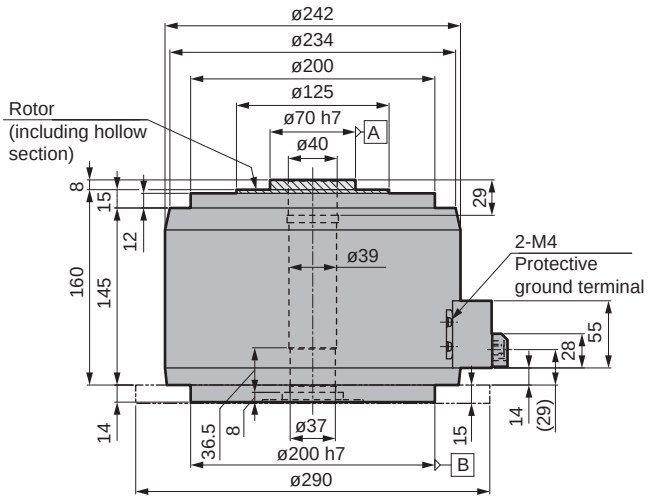

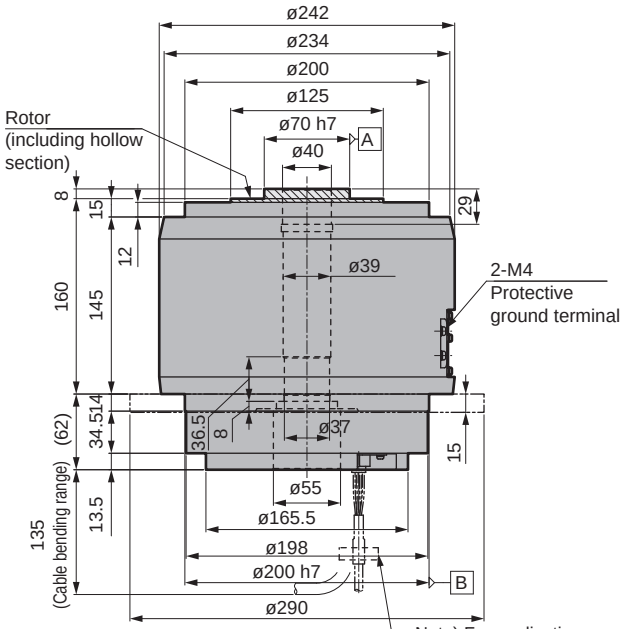

Note) For applications where the cable is bent repeatedly, fix the cable sheath near the actuator body connector before use.

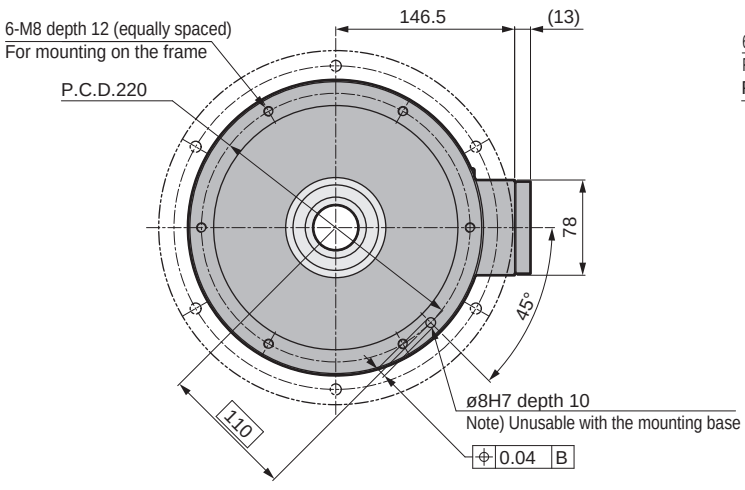

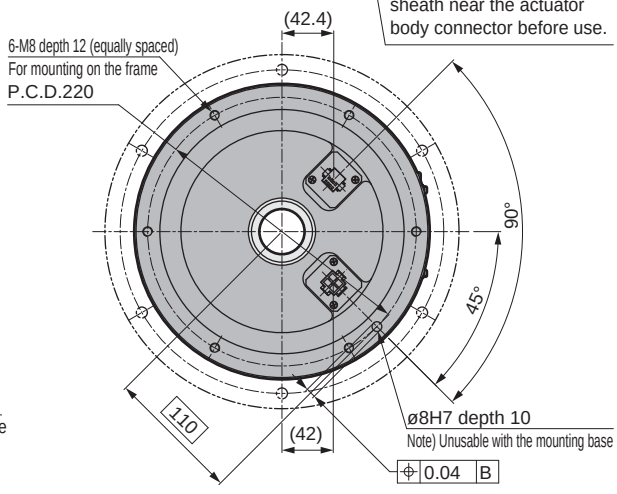

* 1:The actuator origin position may differ from the dimensions. The origin offset function allows you to set an arbitrary home position.

Dimensions

● AX1R-210N

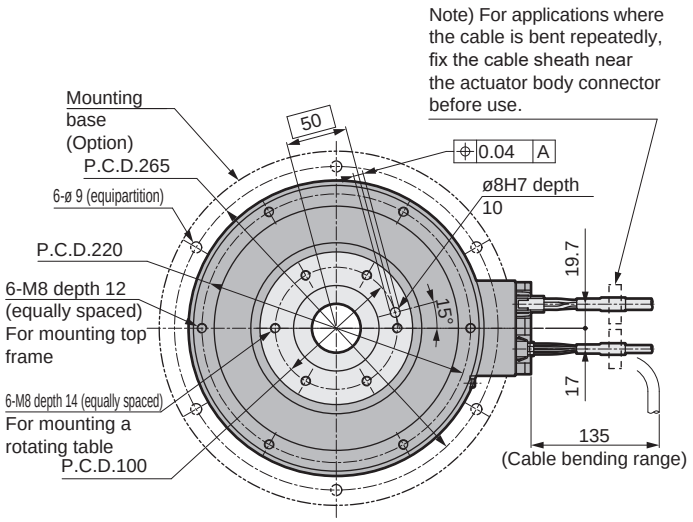

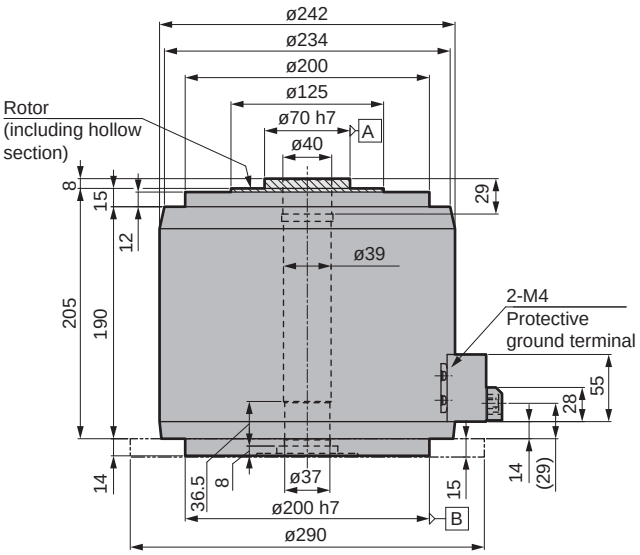

● AX1R-210D

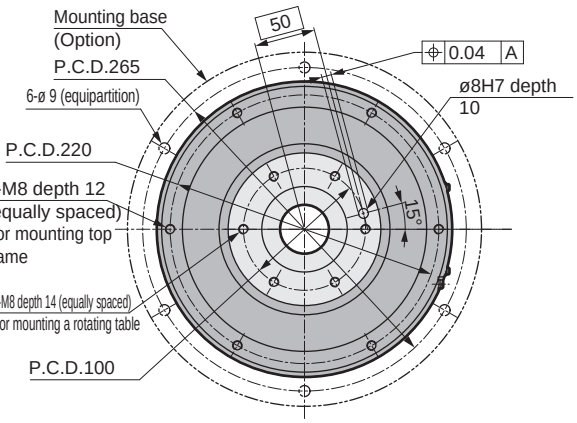

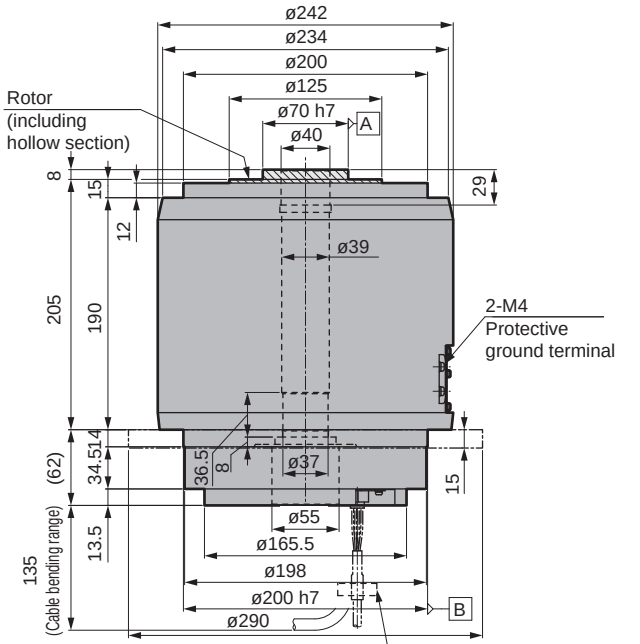

Note) For applications where the cable is bent repeatedly, fix the cable sheath near the actuator body connector before use.

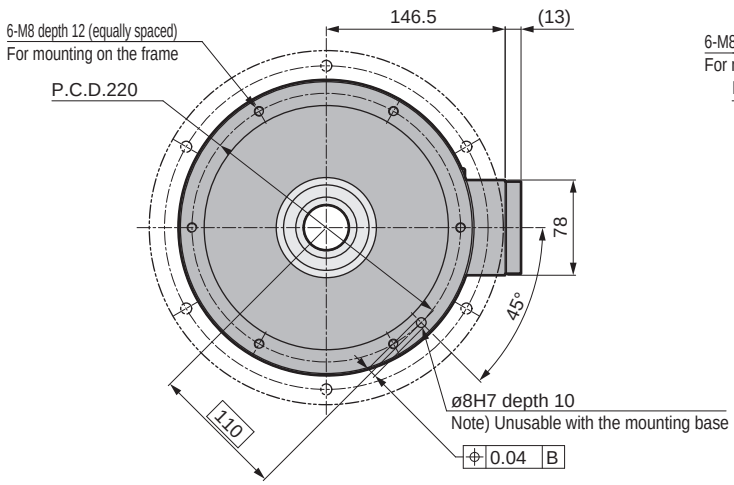

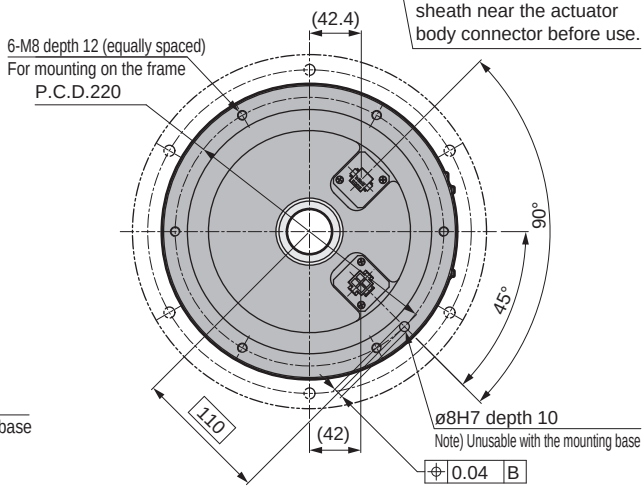

* 1:The actuator origin position may differ from the dimensions. The origin offset function allows you to set an arbitrary home position.

Speed/Maximum torque characteristics

● AX1R-022

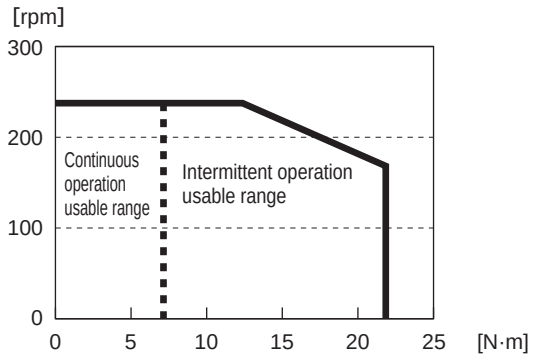

* The graph shows the characteristics of three-phase 200 VAC.

● AX1R-045

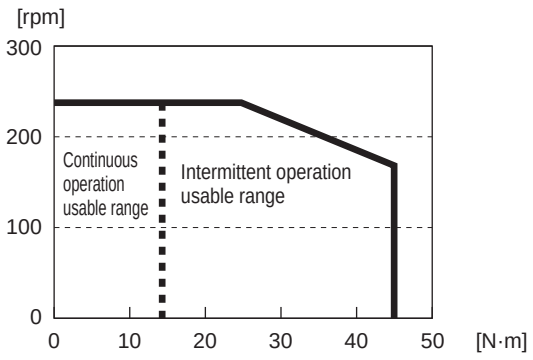

* The graph shows the characteristics of three-phase 200 VAC.

● AX1R-075

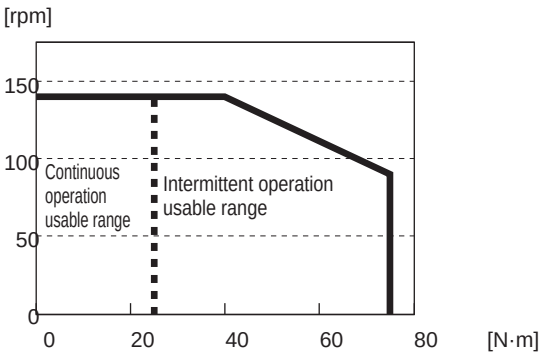

* The graph shows the characteristics of three-phase 200 VAC.

● AX1R-150

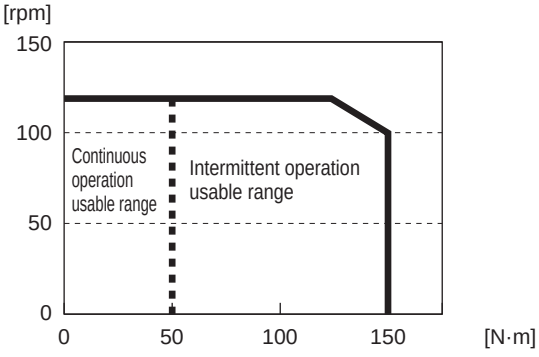

* The graph shows the characteristics of three-phase 200 VAC.

● AX1R-210

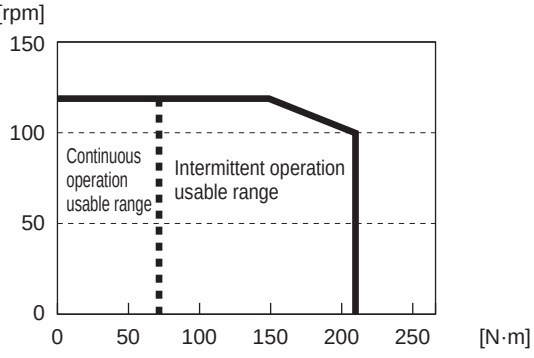

* The graph shows the characteristics of three-phase 200 VAC.

Moment load (simple formula)

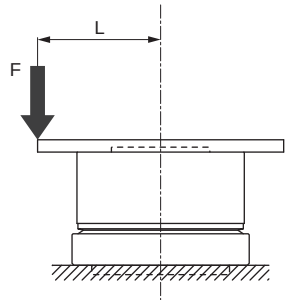

M (N·m)=F (N) x (L) (m)
M: Moment load
F: Load
L: Distance from output shaft center

(Fig. a)

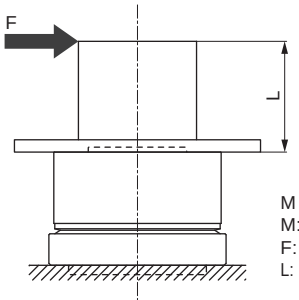

M (N·m)=F (N) x (L+0.02) (m)
M: Moment load
F: Load
L: Distance from output shaft flange surface

(Fig. a)

ABSODEX

AX2R

actuator (high speed rotation)



CONTENTS

Product introduction	Intro
Series variation	1
● How to order	15
● Specifications	16
● Dimensions diagram	17
● Speed/Maximum torque characteristics	20
• Related parts	48
• Model selection	51
⚠ Safety precautions	55
Model Selection Specifications Check Sheet	61



ABSODEX

AX2R Series

High speed rotation (max. rotation speed 300rpm)
- Max. torque: 6/12/18 N·m
- Supported driver: AXD-S

How to order

AX2R - 018 N - BS NN
(1) (2)

① Size (max. torque)	
006	6 N·m
012	12 N·m
018	18 N·m

② Mounting base *4	
NN	Standard (without mounting base)
BS	With mounting base

* 1: Select the driver according to the compatibility table below.

Driver power voltage compatibility table

Model \ Driver Type	Three-phase/single-phase 200 to 240 VAC	
	AXD-S Type	AXD-H Type
AX2R-006	●	
AX2R-012	●	
AX2R-018	●	

* 2: The calculation of torque limit area is different from the usual when used in single-phase 200 VAC. Contact CKD to determine usability.

* 3: The body lead-out cable is not a movable cable.

* 4: ②If the "BS" option with the mounting base is selected, the positioning pin hole on the bottom is not available. The surface is treated with electroless nickel plating.

* 5: Positioning pin holes may not be surface treated.

* 6: The surface is treated with electroless nickel plating.

* Made to order supported products are CE, UKCA, UL/cUL, and RoHS non-compliant.

Actuator specifications

Item		AX2R-006	AX2R-012	AX2R-018
Max. output torque	N·m	6	12	18
Continuous output torque	N·m	2	4	6
Max. rotation speed	rpm	300 (*1)		
Allowable axial load	N	1000		
Allowable moment load	N·m	40		
Output shaft moment of inertia	kg·m^2	0.00575	0.00695	0.00910
Allowable moment of load inertia	kg·m^2	0.3	0.4	0.5
Index accuracy (*4)	sec	±30		
Repeatability (*4)	sec	±5		
Output shaft friction torque	N·m	0.6		0.7
Resolution	P/rev	540672/2097152 (*2)		
Insulation class		Class F		
Withstand voltage		1500 VAC 1 min.		
Insulation resistance		10 MΩ and over, 500 VDC		
Operating ambient temperature		0 to 40°C		
Operating ambient humidity		20 to 85% RH, no condensation		
Storage ambient temperature		-20 to 80°C		
Storage ambient humidity		20 to 90% RH, no condensation		
Atmosphere		No corrosive gas, explosive gas, or dust		
Weight	kg	4.7 (6.0) (*3)	5.8 (7.1) (*3)	7.5 (8.8) (*3)
Output shaft runout (*4)	mm	0.03		
Output shaft surface runout (*4)	mm	0.03		
Degree of protection		IP20		

*1: Use at a speed of 140 rpm or less under the resolution of 2097152 P/rev conditions.
*2: Shipment status is 540672 P/rev resolution. The resolution can be switched to 2097152 P/rev with the PC software.
*3: The values in ( ) are the actuator weight with the mounting base option.
*4: Refer to the ”Glossary” on page 54 for index accuracy, repeatability, output shaft runout and output shaft surface runout.

Dimensions

● AX2R-006

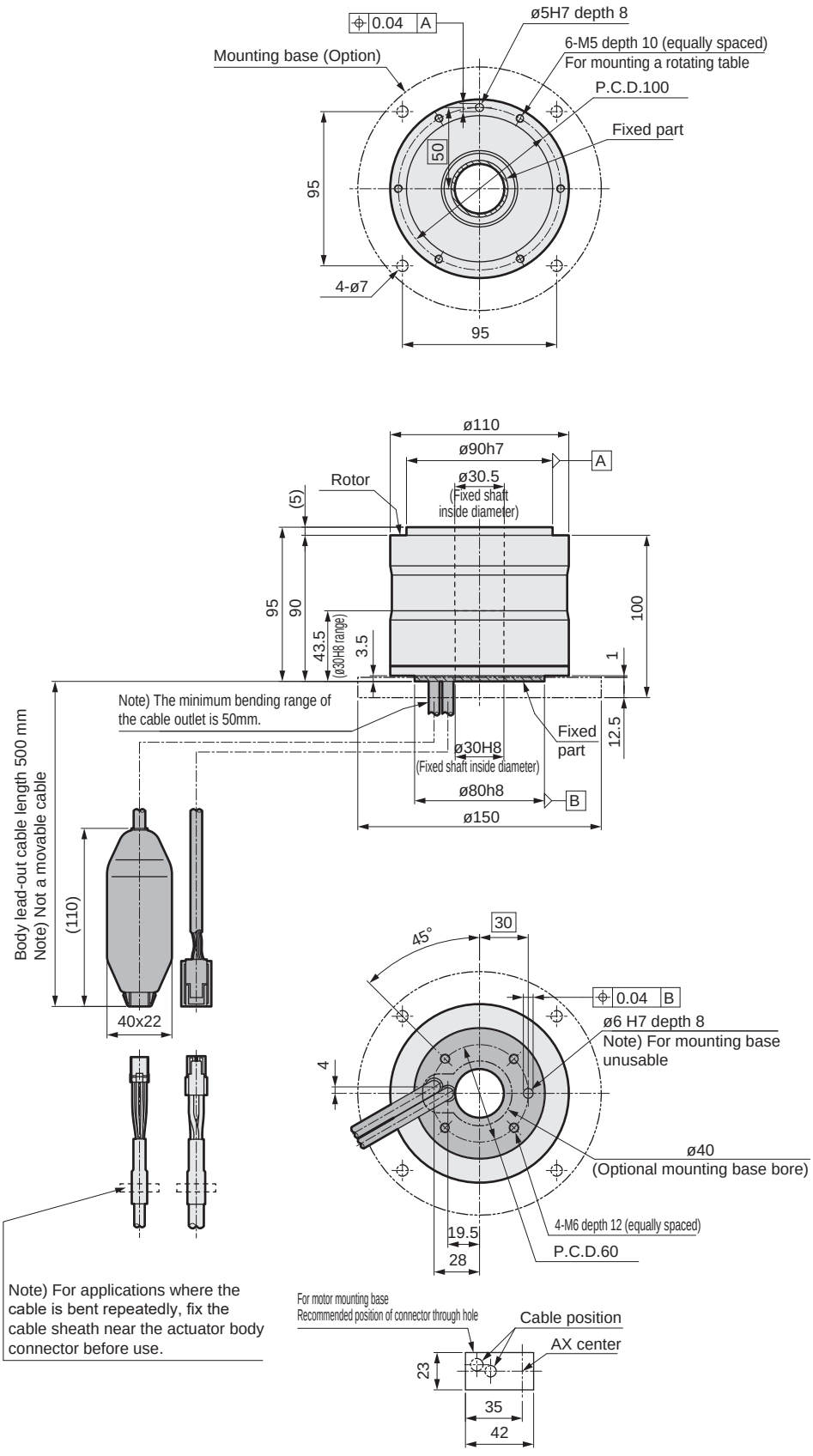

* 1:The actuator origin position may differ from the dimensions. The origin offset function allows you to set an arbitrary home position.
* 2: The lead-out cable of the actuator section is not movable. Make sure to secure the cable at the connector so that it does not move. Do not lift up the body by the lead-out cable or apply excessive force to the cable. Doing so may activate the malfunction alarm or cause the connector to break or become disconnected.

Dimensions

● AX2R-012

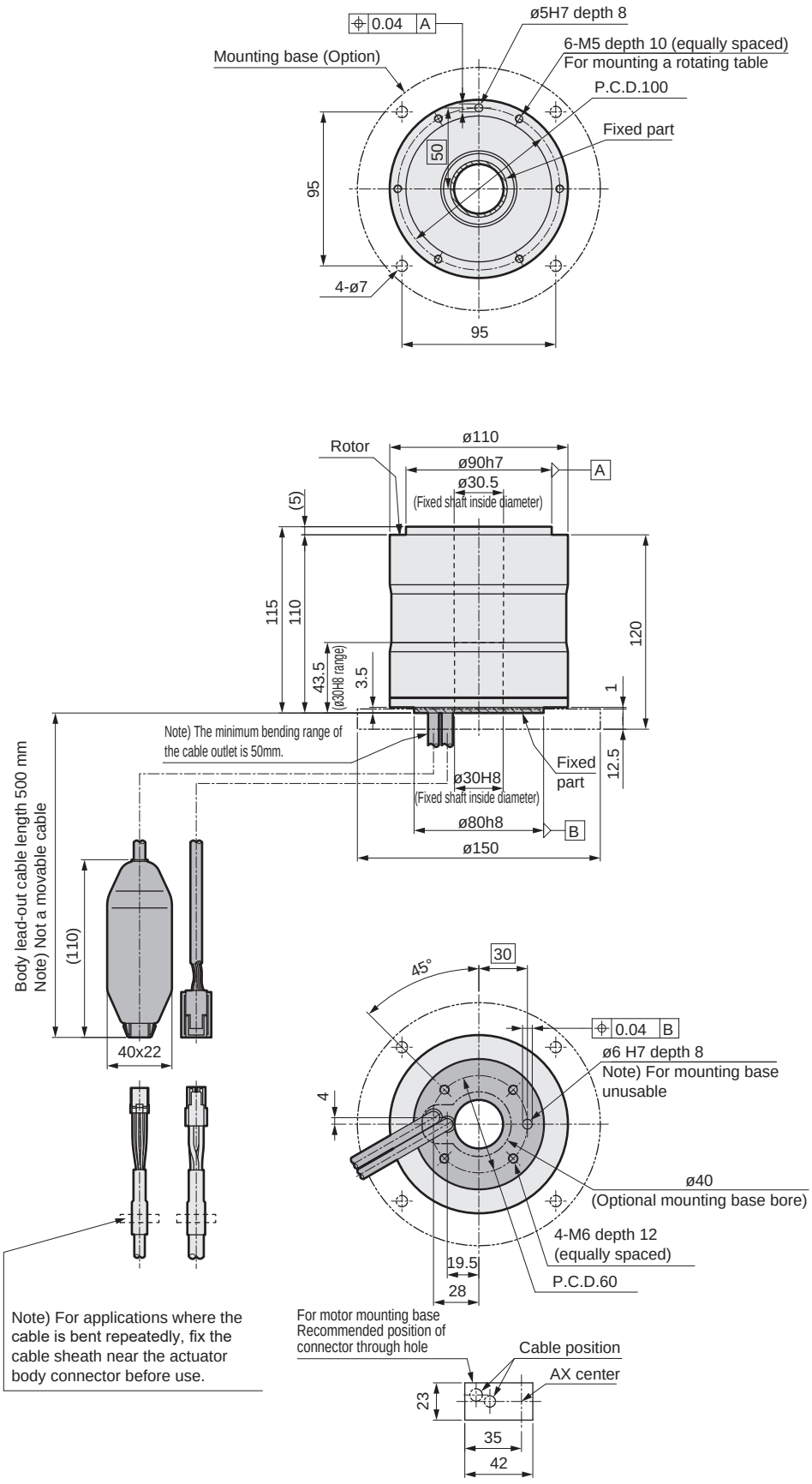

* 1: The actuator origin position may differ from the dimensions. The origin offset function allows you to set an arbitrary home position.
* 2: The lead-out cable of the actuator section is not movable. Make sure to secure the cable at the connector so that it does not move. Do not lift up the body by the lead-out cable or apply excessive force to the cable. Doing so may activate the malfunction alarm or cause the connector to break or become disconnected.

Dimensions

● AX2R-018

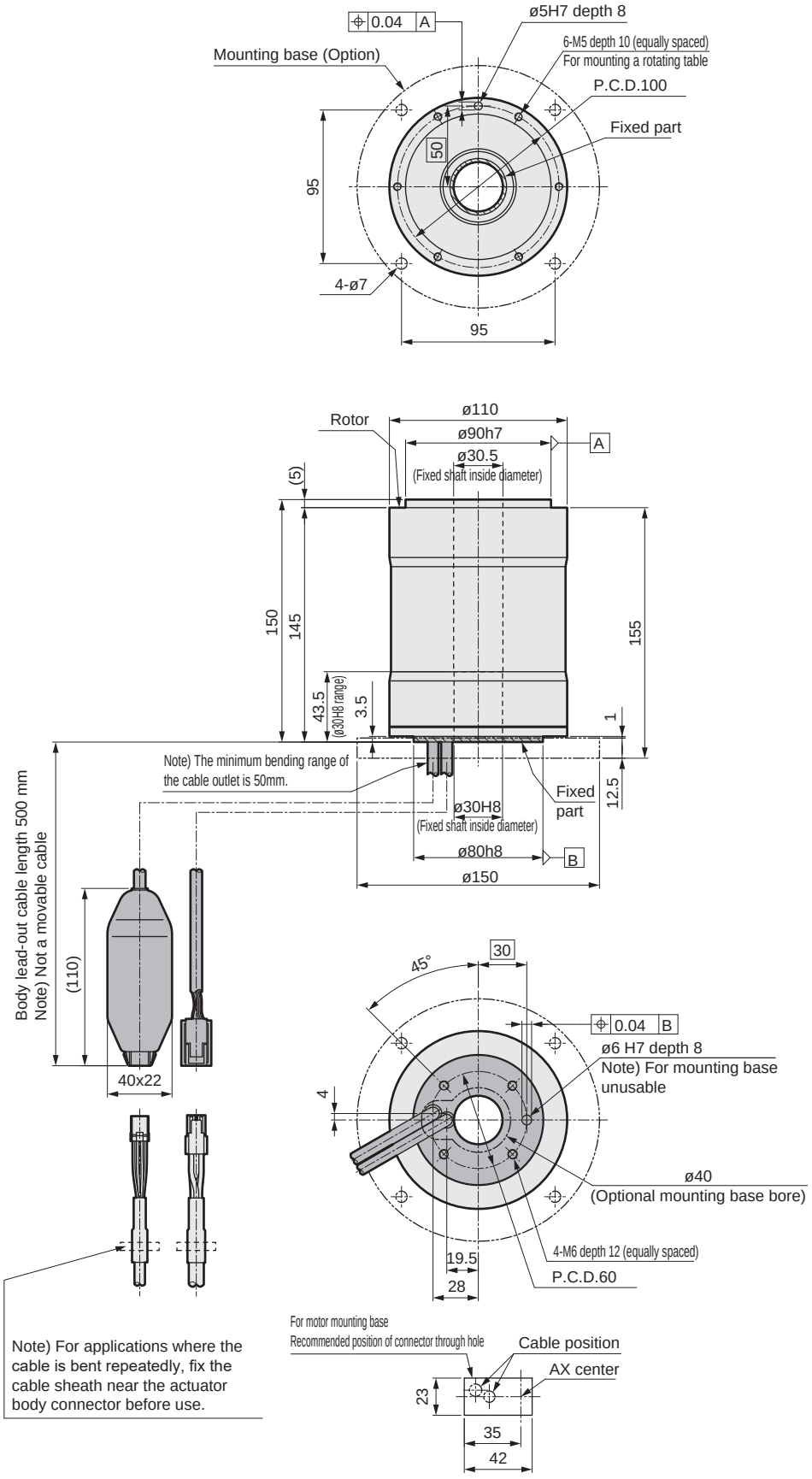

* 1:The actuator origin position may differ from the dimensions. The origin offset function allows you to set an arbitrary home position.
* 2: The lead-out cable of the actuator section is not movable. Make sure to secure the cable at the connector so that it does not move. Do not lift up the body by the lead-out cable or apply excessive force to the cable. Doing so may activate the malfunction alarm or cause the connector to break or become disconnected.

Speed/Maximum torque characteristics

●AX2R-006

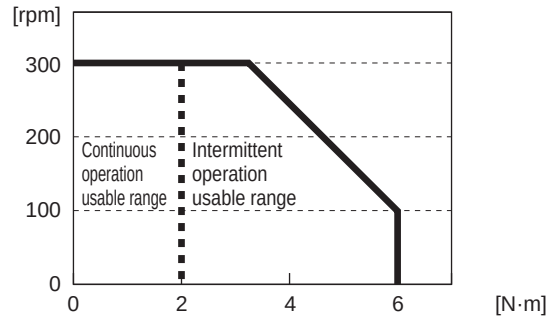

* The graph shows the characteristics of three-phase 200 VAC.

●AX2R-012

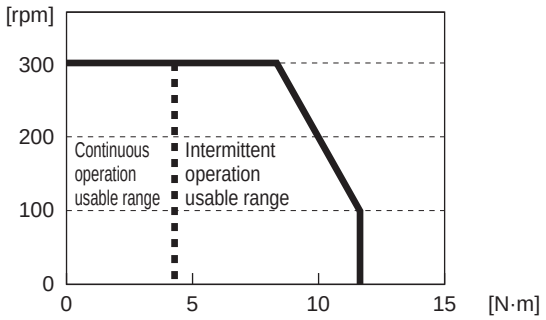

* The graph shows the characteristics of three-phase 200 VAC.

●AX2R-018

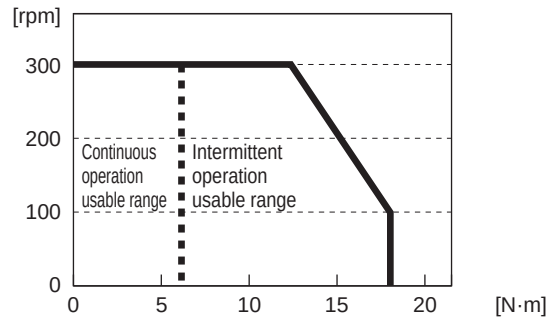

* The graph shows the characteristics of three-phase 200 VAC.

Moment load (simple formula)

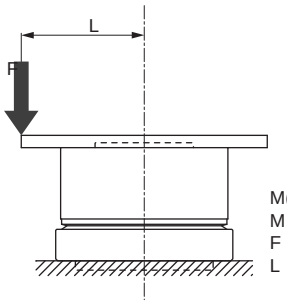

M(N·m)=F(N)×L(m)
M : Moment load
F : Load
L : Distance from the output shaft center

(Fig. a)

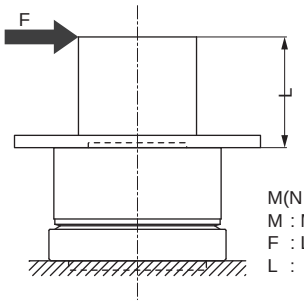

M(N·m) = F(N)×(L+0.02)(m)
M : Moment load
F : Load
L : Distance from the output shaft flange surface

(Fig. b)

ABSODEX

AX4R

actuator (standard)



CONTENTS

Product introduction	Intro
Series variation	1
● How to order	
• AX4R-009,022,045,075	23
• AX4R-150, 300, 500, 10W	29
● Specifications	
• AX4R-009,022,045,075	24
• AX4R-150, 300, 500, 10W	30
● Dimensions	
• AX4R-009, 022, 045, 075	25
• AX4R-150, 300, 500, 10W	31
● Speed/Maximum torque characteristics	
• AX4R-009, 022, 045, 075	35
• AX4R-150, 300, 500, 10W	36
• Related parts	48
• Model selection	51
⚠Safety precautions	55
Model Selection Specifications Check Sheet	61



ABSODEX

AX4R Series

Standard
- Max. torque: 9/22/45/75 N·m
- Supported driver: AXD-S

How to order

AX4R - 045 N - BS EB

❶ ❷ ❸

❶ Size (max. torque)

009	9 N·m
022	22 N·m
045	45 N·m
075	75 N·m

❷ Mounting base *4

NN	Standard (without mounting base)
BS	With mounting base

❸ Brake *6

NN	Standard (without electromagnetic brake)
EB	Negative-actuated electromagnetic brake

*1: Select the driver according to the compatibility table below.

Driver power voltage compatibility table

Model \ Driver Type	Three-phase/single-phase 200 to 240 VAC	
	AXD-S Type	AXD-H Type
AX4R-009	●	
AX4R-022	●	
AX4R-045	●	
AX4R-075	●	

*2: The calculation of torque limit area is different from the usual when used in single-phase 200 VAC. Contact CKD to determine usability.

*3: The body lead-out cable is not a movable cable.

*4: ❷ The lower surface positioning pin hole cannot be used if the "BS" option for Mounting base is selected. The surface is treated with electroless nickel plating.

*5: Positioning pin holes may not be surface treated.

*6: When selecting an electromagnetic brake, refer to the precautions for the electromagnetic brake connection method (page 59). For options, select according to the "Option compatibility table" below.

Option compatibility Table

	AX4R-009	AX4R-022	AX4R-045	AX4R-075
Mounting base (-BS)		●	●	●
Brake (-EB)		●	●	●

*7: The surface of the body is treated with electroless nickel plating.

* Made to order supported products are CE, UKCA, UL/cUL, and RoHS non-compliant.

Actuator specifications

Item		AX4R-009	AX4R-022	AX4R-045	AX4R-075
Max. output torque	N·m	9	22	45	75
Continuous output torque	N·m	3	7	15	25
Max. rotation speed	rpm	240 (*1)			140
Allowable axial load	N	800	3700		20000
Allowable moment load	N·m	40	60	80	200
Output shaft moment of inertia	kg·m^2	0.009	0.0206	0.0268	0.1490
Allowable moment of load inertia	kg·m^2	1.75	3.00	5.00	25.00
Index accuracy (*4)	sec	±30			
Repeatability (*4)	sec	±5			
Output shaft friction torque	N·m	0.8	3.5		10.0
Resolution	P/rev	540672/2097152 (*2)			
Insulation class		Class F			
Withstand voltage		1500 VAC 1 min.			
Insulation resistance		10 MΩ and over, 500 VDC			
Operating ambient temperature		0 to 40°C			
Operating ambient humidity		20 to 85% RH, no condensation			
Storage ambient temperature		-20 to 80°C			
Storage ambient humidity		20 to 90% RH, no condensation			
Atmosphere		No corrosive gas, explosive gas, or dust			
Weight	kg	5.5	12.3 (14.6) (*3)	15.0 (17.3) (*3)	36.0 (41.0) (*3)
Total weight with brake	kg	-	16.4 (18.7) (*3)	19.3 (21.6) (* 3)	54.0 (59.0) (*3)
Output shaft runout (*4)	mm	0.03			
Output shaft surface runout (*4)	mm	0.05			
Degree of protection		IP20			

* 1: Use at a speed of 140 rpm or less under the resolution of 2097152 P/rev conditions.
* 2: Shipment status is 540672 P/rev resolution. The resolution can be switched to 2097152 P/rev with the PC software.
* 3: The values in ( ) are the actuator weight with the mounting base option.
* 4: Refer to the "Glossary" on page 54 for index accuracy, repeatability, output shaft runout and output shaft surface runout.

Electromagnetic brake specifications (option)

Item \ Compatibility		AX4R-022, AX4R-045	AX4R-075
Type		Non-backlash dry type non-excitation	
Rated voltage	V	24 VDC	
Power capacity	W	30	55
Rated current	A	1.25	2.30
Static friction torque	N·m	35	200
Armature release time (brake on)	msec	50 (reference value)	50 (reference value)
Armature suction time (brake off)	msec	150 (reference value)	250 (reference value)
Retention accuracy	Minutes	45 (reference value)	
Max. operating frequency	cycles/min.	60	40

*1: During output shaft rotation, the electromagnetic brake disk and fixed part may cause a scraping sound. Impact noise is generated when the electromagnetic brake is activated.
*2: For travel after brake off, you must change the parameter delay time by the above-mentioned armature suction time.
*3: Though it is a non-backlash type, holding a constant position is difficult if load is applied in the rotation direction. It is not for brake/accuracy retention.
*4: The electromagnetic brake can be manually released by uniformly tightening the bolts in the manual release tap (3 locations).
*5: To pass a shaft through the hollow of the model equipped with an electromagnetic brake, use a non-magnetic material (such as SUS303). Magnetization may cause a magnetic effect on peripheral devices.
*For details on precautions, refer to the technical data and instruction manual.

Dimensions

● AX4R-009

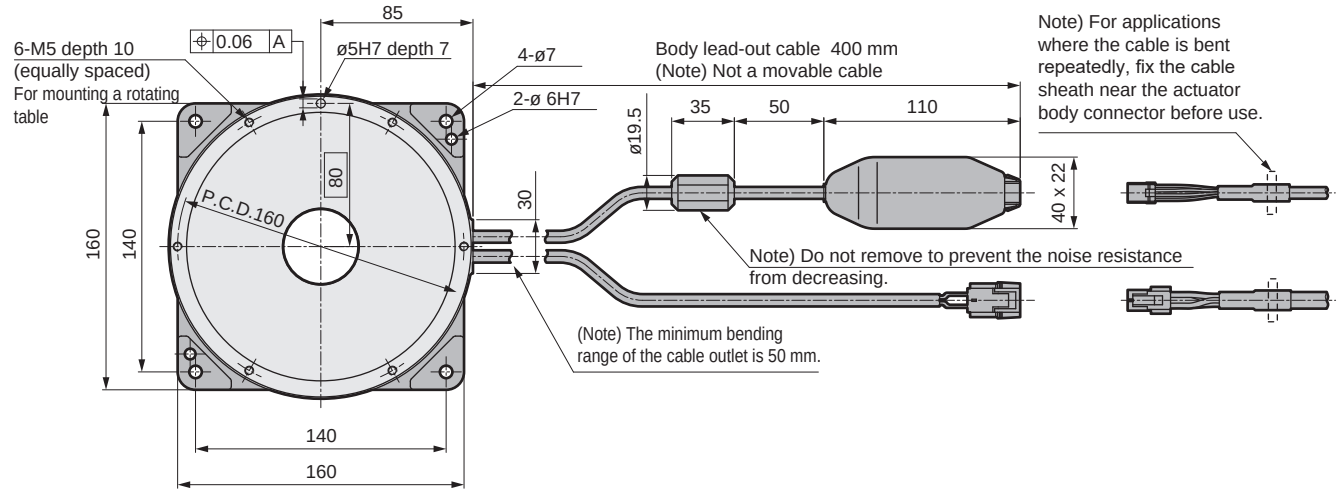

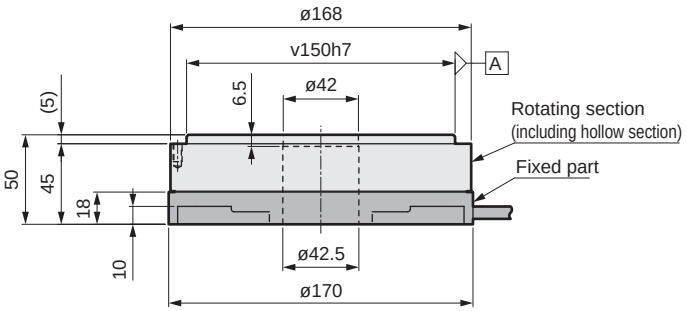

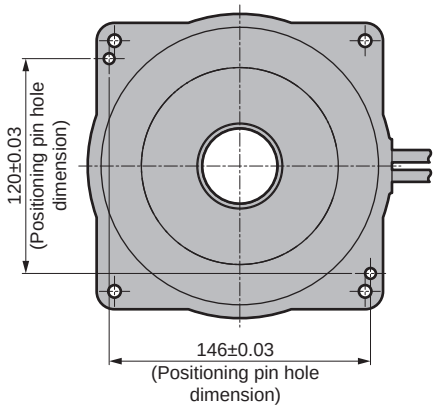

* 1: The actuator origin position may differ from the dimensions. The origin offset function allows you to set an arbitrary home position.
* 2: The lead-out cable of the actuator section is not movable. Make sure to secure the cable at the connector so that it does not move. Do not lift up the body by the lead-out cable or apply excessive force to the cable. Doing so may activate the malfunction alarm or cause the connector to break or become disconnected.

Dimensions

● AX4R-022

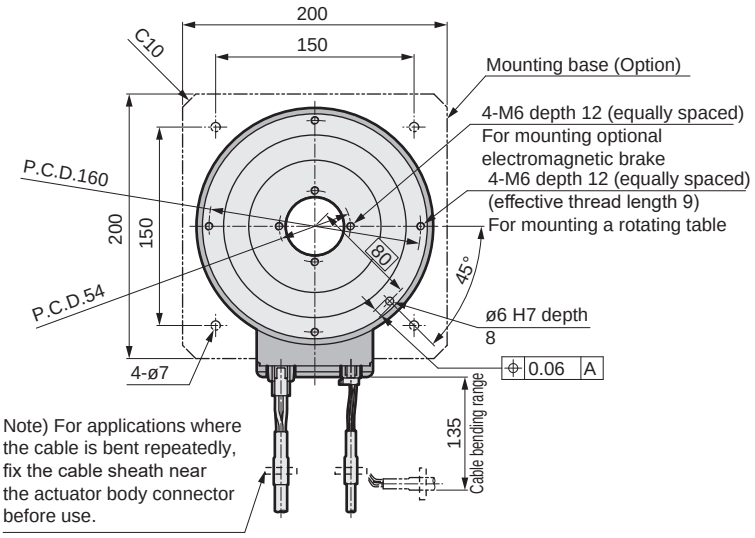

Note) For applications where the cable is bent repeatedly, fix the cable sheath near the actuator body connector before use.

● AX4R-022-EB
With electromagnetic brake
For other options, refer to the left figure on the left.

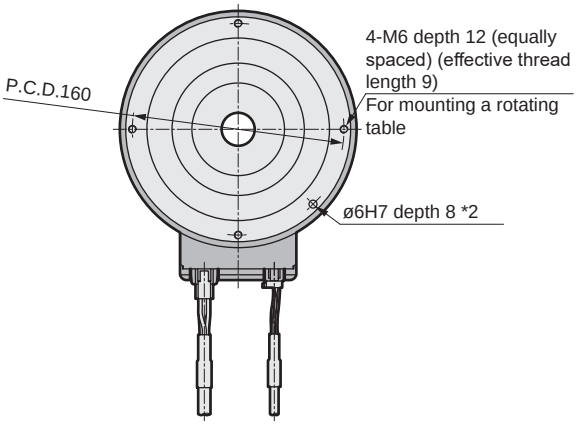

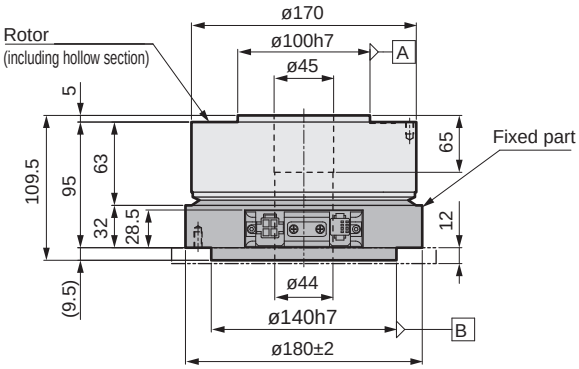

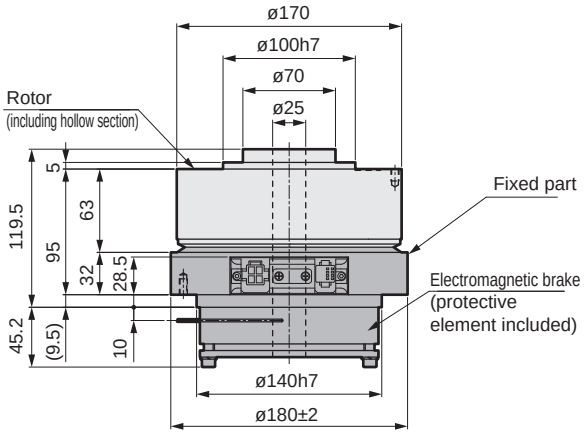

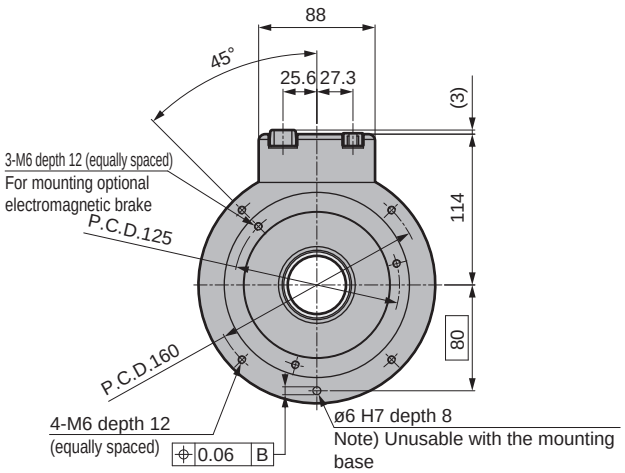

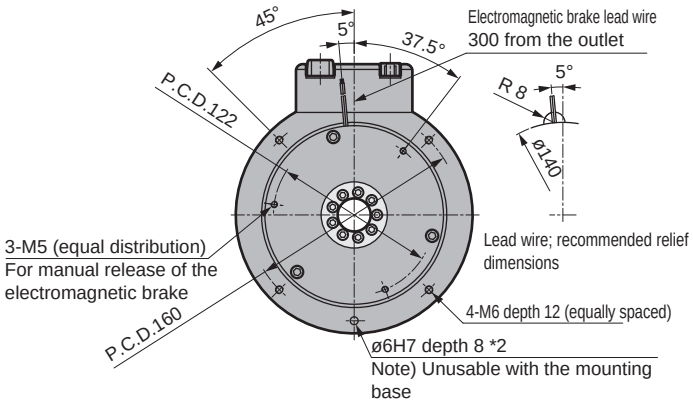

* 1:The actuator origin position may differ from the dimensions. The origin offset function allows you to set an arbitrary home position.
* 2: The position of the positioning pin hole is the same as that of AX4R-022.

Dimensions

● AX4R-045

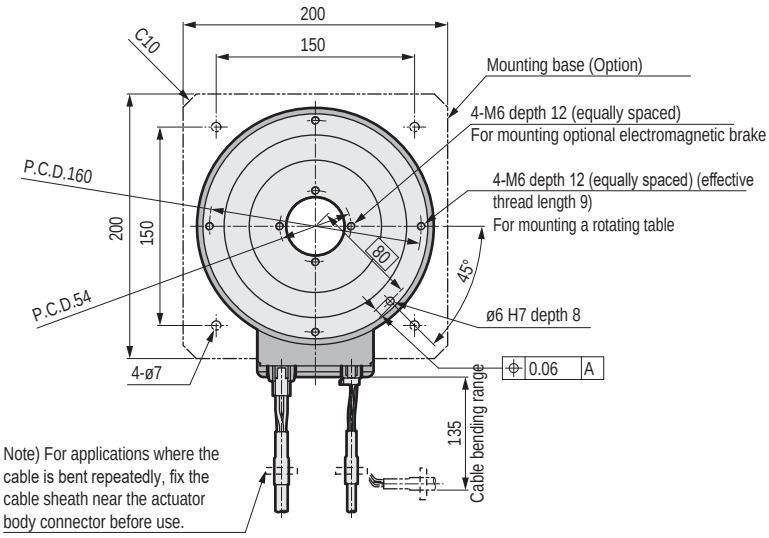

● AX4R-045-EB

With electromagnetic brake
For other options, refer to the left figure on the left.

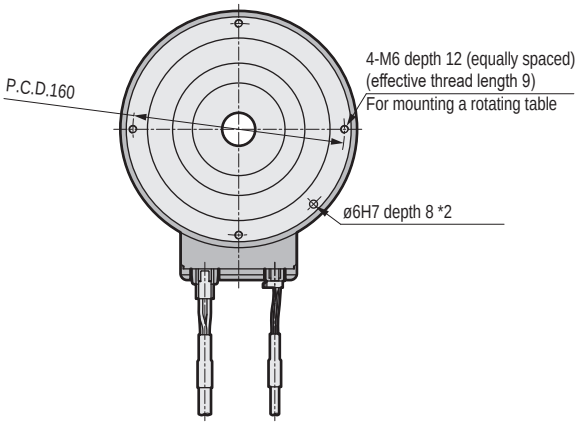

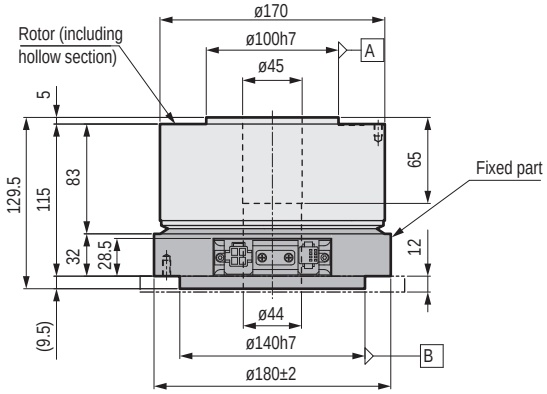

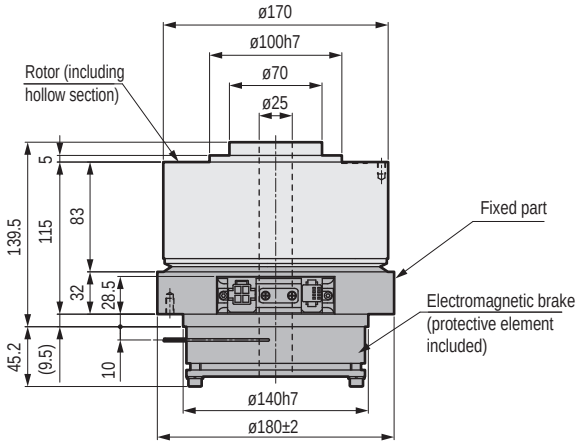

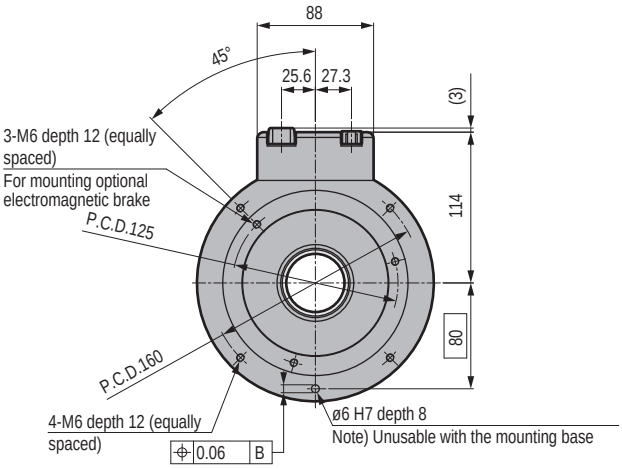

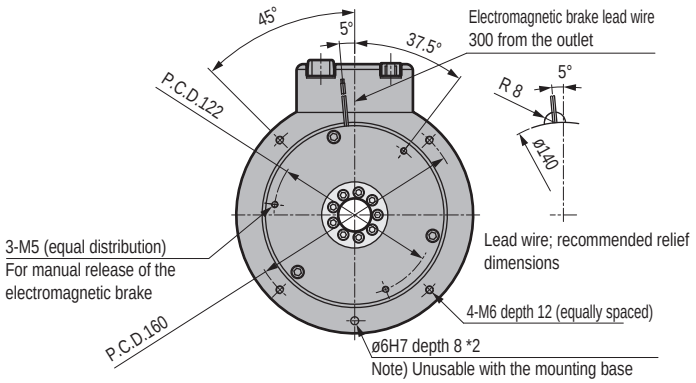

* 1:The actuator origin position may differ from the dimensions. The origin offset function allows you to set an arbitrary home position.
* 2: The position of the positioning pin hole is the same as that of AX4R-045.

Dimensions

● AX4R-075

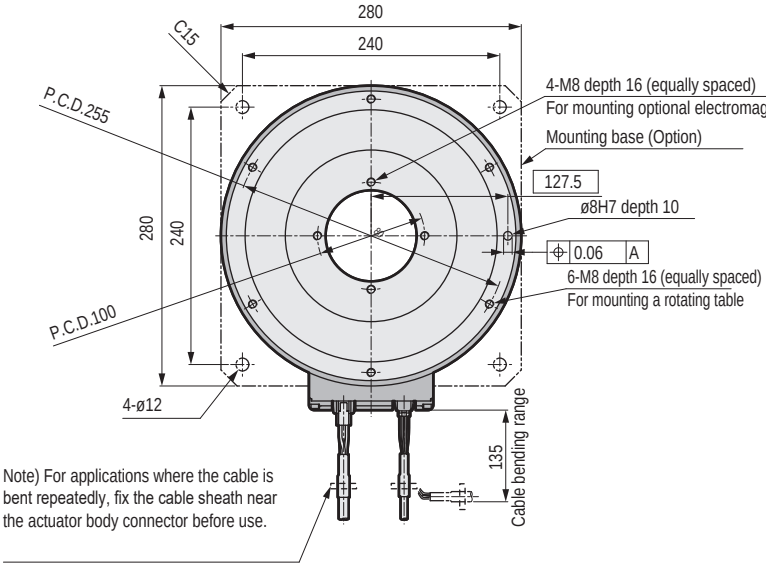

Note) For applications where the cable is bent repeatedly, fix the cable sheath near the actuator body connector before use.

● AX4R-075-EB
With electromagnetic brake
For other options, refer to the left figure on the left.

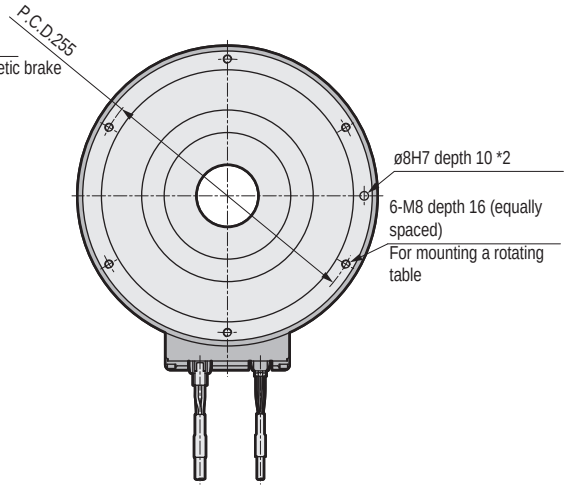

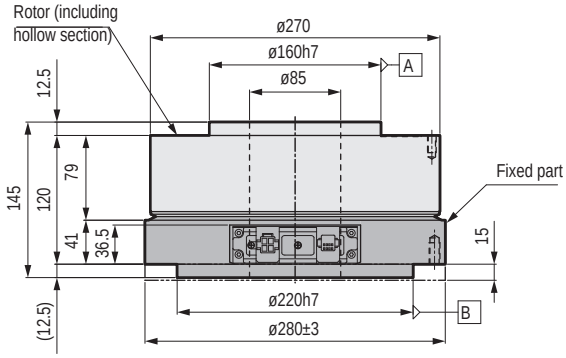

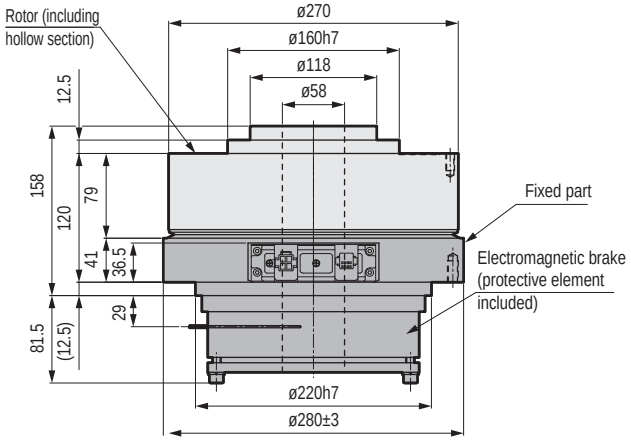

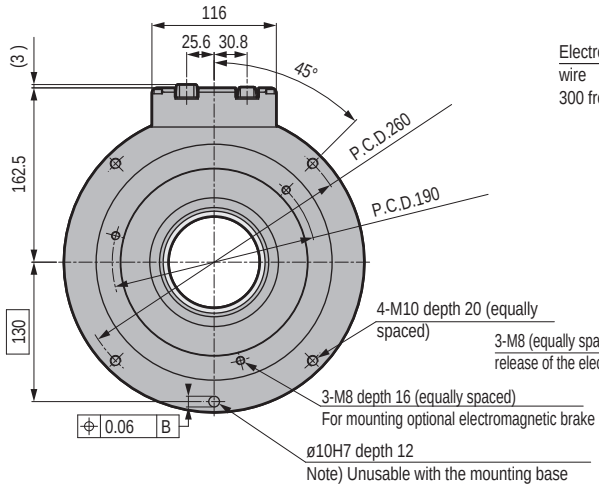

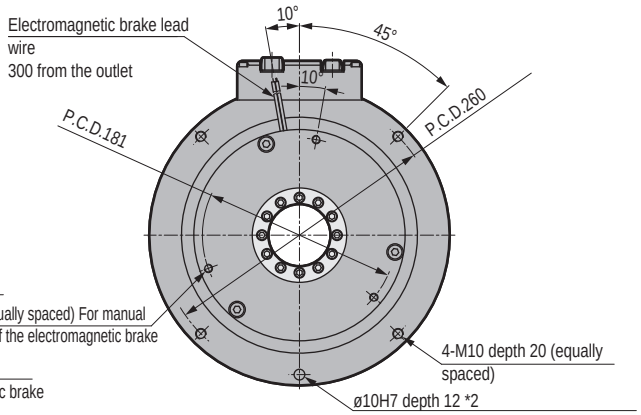

* 1:The actuator origin position may differ from the dimensions. The origin offset function allows you to set an arbitrary home position.
* 2: The position of the positioning pin hole is the same as that of AX4R-075.



ABSODEX

AX4R Series

Standard
- Max. torque: 150/300/500/1000 N·m
- Supported driver: AXD-H

How to order

AX4R - 300 N - BS EB
(1) (2) (3)

(1) Size (max. torque)

150	150 N·m
300	300 N·m
500	500 N·m
10W	1000 N·m

(2) Mounting base *3

NN	Standard (without mounting base)
BS	With mounting base

(3) Brake *4

NN	Standard (without electromagnetic brake)
EB	Negative-actuated electromagnetic brake

*1: Select the driver according to the compatibility table below.

Driver power voltage compatibility table

Model \ Driver Type	Three-phase/single-phase AC200 to 240V	
	AXD-S Type	AXD-H Type
AX4R-150		●
AX4R-300		●
AX4R-500		●
AX4R-10W		●

*2: The calculation of torque limit area is different from the usual when used in single-phase 200 VAC. Contact CKD to determine usability.

*3: (2) The lower surface positioning pin hole is
Not available. The surface is treated with electroless nickel plating.

*4: When selecting an electromagnetic brake, refer to the precautions for the electromagnetic brake connection method (page 59). For options, select according to the "Option compatibility table" below.

Option compatibility table

	AX4R-150	AX4R-300	AX4R-500	AX4R-10W
Brake (-EB)	●	●		

*5: Positioning pin holes may not be surface treated.

*6: The surface is treated with electroless nickel plating.

* Made to order supported products are CE, UKCA, UL/cUL, and RoHS non-compliant.

Actuator specifications

Item		AX4R-150	AX4R-300	AX4R-500	AX4R-10W
Max. output torque	N·m	150	300	500	1000
Continuous output torque	N·m	50	100	160	330
Max. rotation speed	rpm	100		70	30
Allowable axial load	N	20000			
Allowable moment load	N·m	300	400	500	400
Output shaft moment of inertia	kg·m^2	0.2120	0.3260	0.7210	2.7200
Allowable moment of load inertia	kg·m^2	75.00	180.00	300.00	600.00
Index accuracy (*3)	sec	±30			
Repeatability (*3)	sec	±5			
Output shaft friction torque	N·m	10.0		15.0	20.0
Resolution	P/rev	540672/2097152 (*1)			
Insulation class		Class F			
Withstand voltage		1500 VAC 1 min.			
Insulation resistance		10 MΩ and over, 500 VDC			
Operating ambient temperature		0 to 40 °C			
Operating ambient humidity		20 to 85% RH, no condensation			
Storage ambient temperature		-20 to 80°C			
Storage ambient humidity		20 to 90% RH, no condensation			
Atmosphere		No corrosive gas, explosive gas, or dust			
Weight	kg	44.0 (49.0) (*2)	66.0 (74.0) (*2)	115.0 (123.0) (*2)	198.0 (217.0) (*2)
Total weight with brake	kg	63.0 (68.0) (*2)	86.0 (94.0) (*2)	-	-
Output shaft runout (*3)	mm	0.03			
Output shaft surface runout (*3)	mm	0.05			0.08
Degree of protection		IP20			

*1: Shipment status is 540672 P/rev resolution. The resolution can be switched to 2097152 P/rev with the PC software.
*2: The values in ( ) are the actuator weight with the mounting base option.
*3: Refer to the "Glossary" on page 54 for index accuracy, repeatability, output shaft runout and output shaft surface runout.

Electromagnetic brake specifications (option)

Item \ Compatibility		AX4R-150, AX4R-300
Type		Non-backlash dry type non-excitation
Rated voltage	V	24 VDC
Power capacity	W	55
Rated current	A	2.30
Static friction torque	N·m	200
Armature release time (brake on)	msec	50 (reference value)
Armature suction time (brake off)	msec	250 (reference value)
Retention accuracy	Minutes	45 (reference value)
Max. operating frequency	cycles/min.	40

*1: During output shaft rotation, the electromagnetic brake disk and fixed part may cause a scraping sound. Impact noise is generated when the electromagnetic brake is activated.
*2: For travel after brake off, you must change the parameter delay time by the above-mentioned armature suction time.
*3: Though it is a non-backlash type, holding a constant position is difficult if load is applied in the rotation direction. It is not for brake/accuracy retention.
*4: The electromagnetic brake can be manually released by uniformly tightening the bolts in the manual release tap (3 locations).
*5: To pass a shaft through the hollow of the model equipped with an electromagnetic brake, use a non-magnetic material (such as SUS303). Magnetization may cause a magnetic effect on peripheral devices.
*For details on precautions, refer to the technical data and instruction manual.

Dimensions

● AX4R-150

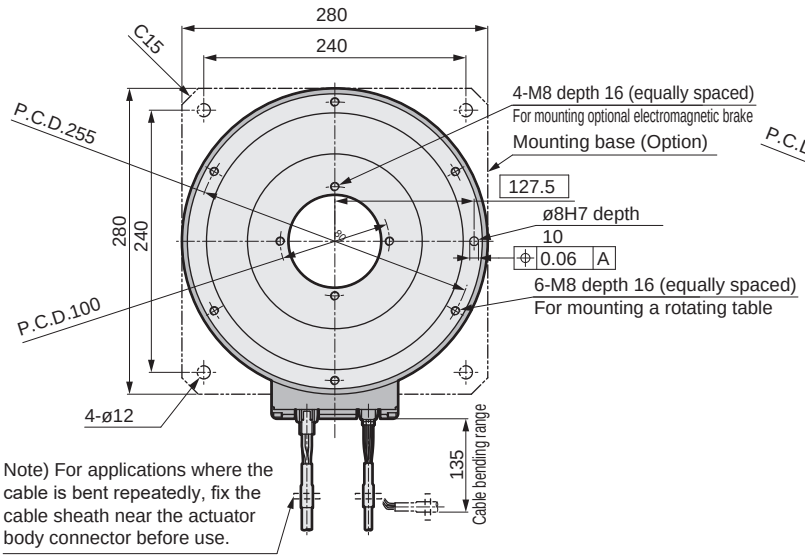

● AX4R-150-EB
With electromagnetic brake
For other options, refer to the left figure on the left.

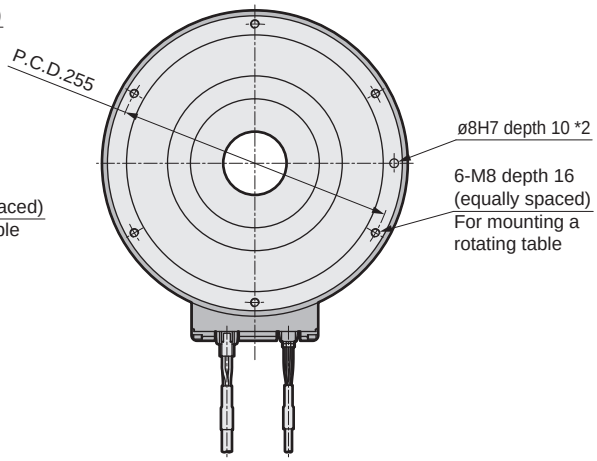

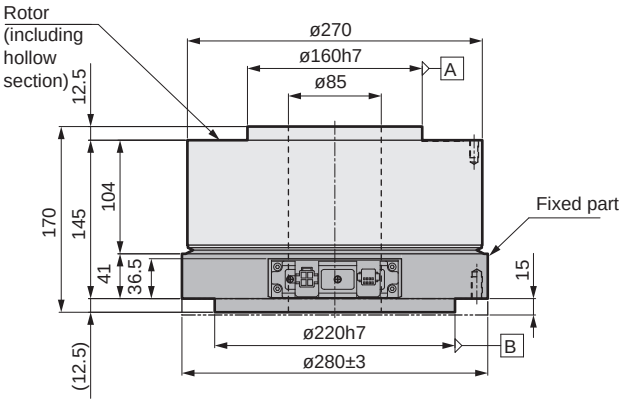

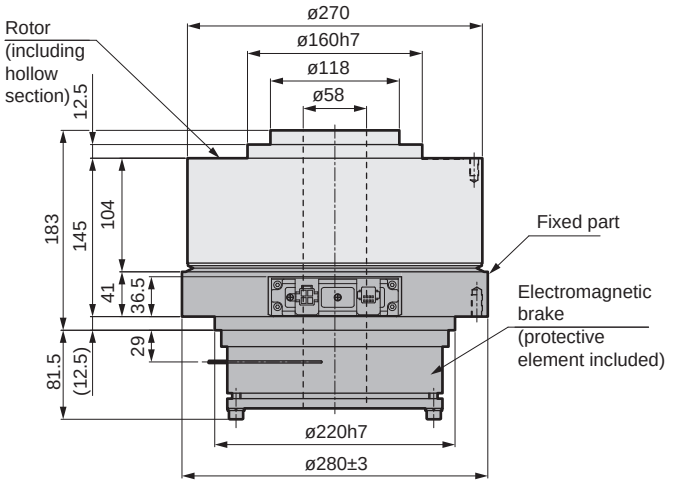

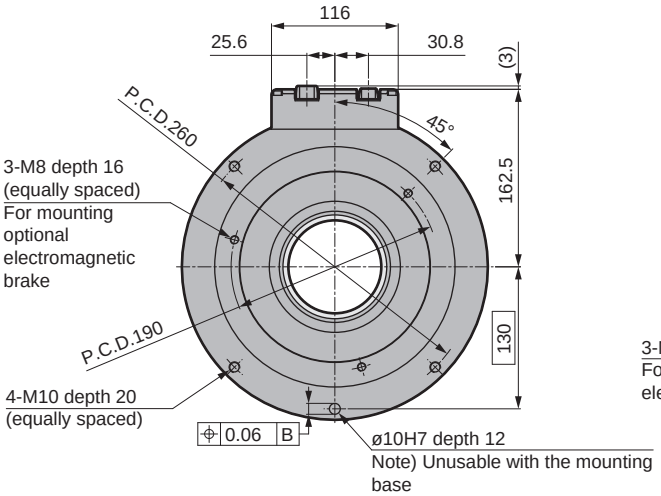

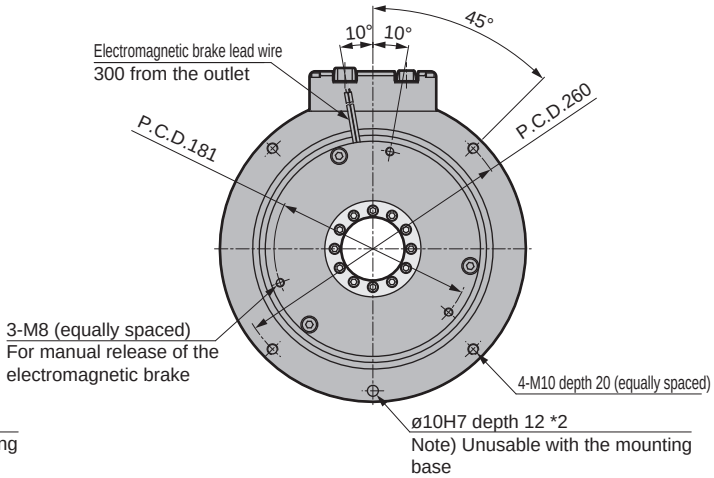

* 1: The actuator origin position may differ from the dimensions. The origin offset function allows you to set an arbitrary home position.
* 2: The position of the positioning pin hole is the same as that of AX4R-150.

Dimensions

● AX4R-300

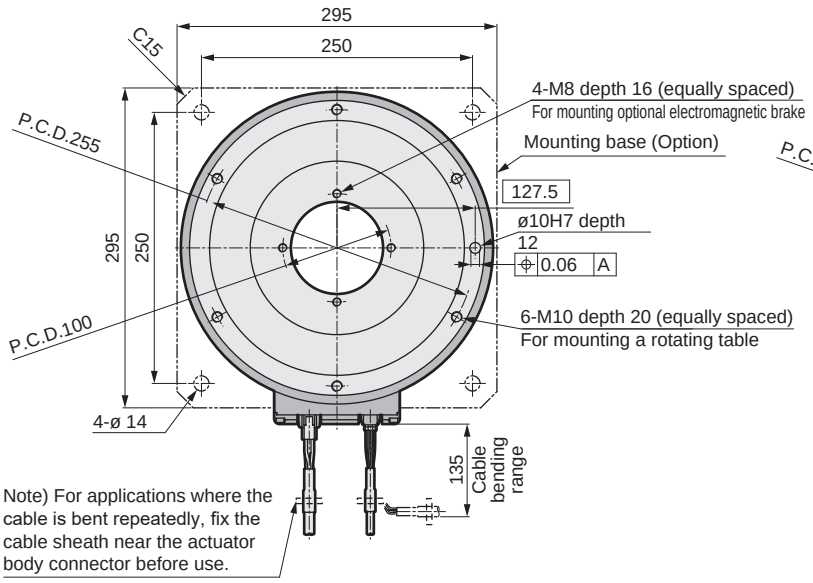

Note) For applications where the cable is bent repeatedly, fix the cable sheath near the actuator body connector before use.

● AX4R-300-EB
With electromagnetic brake
For other options, refer to the left figure on the left.

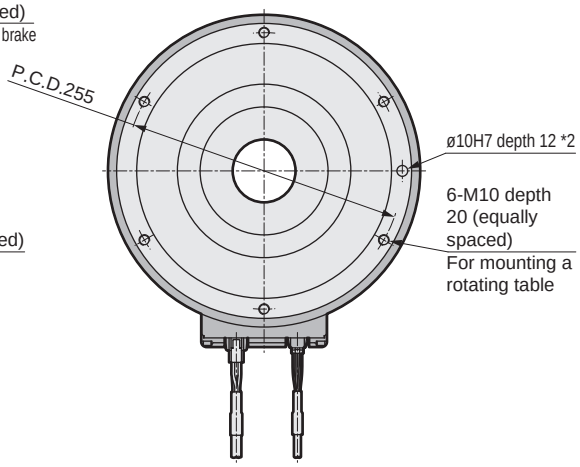

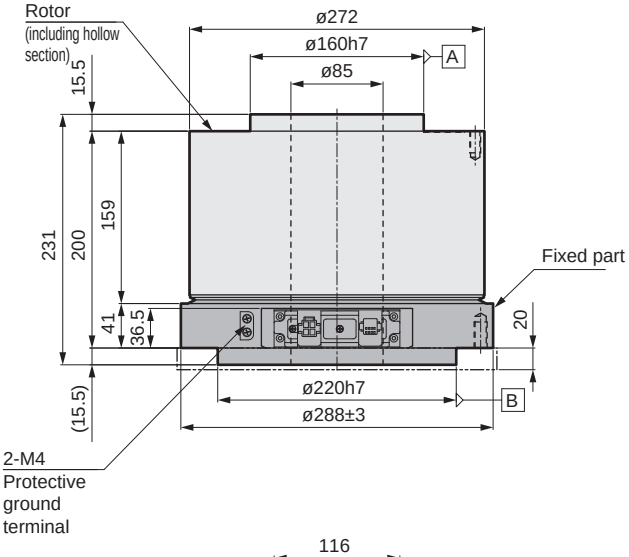

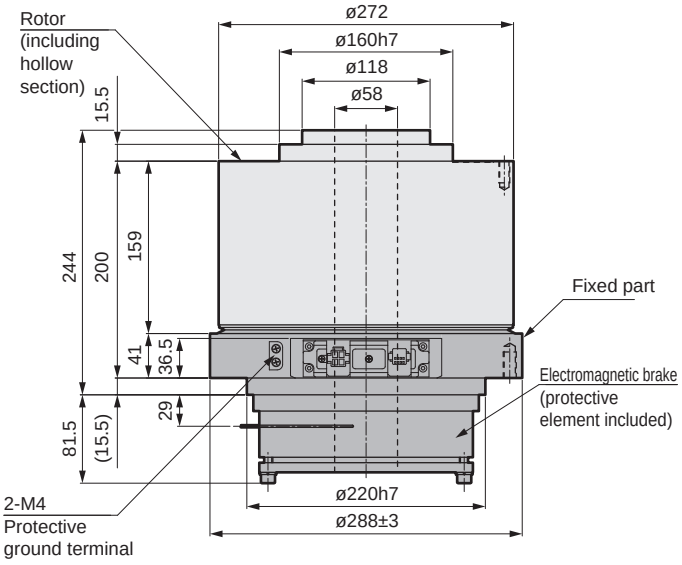

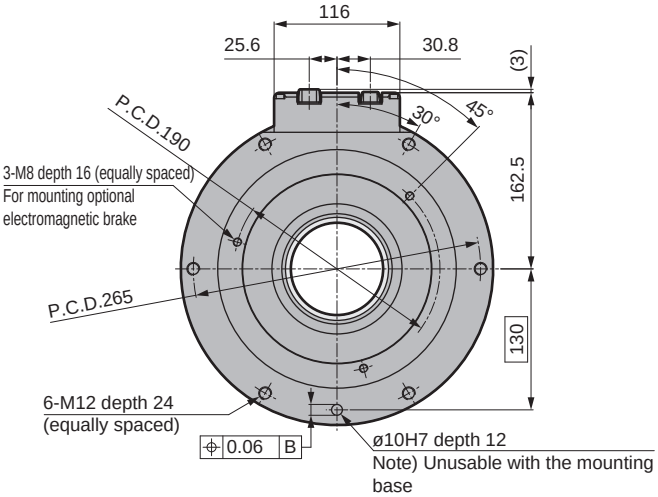

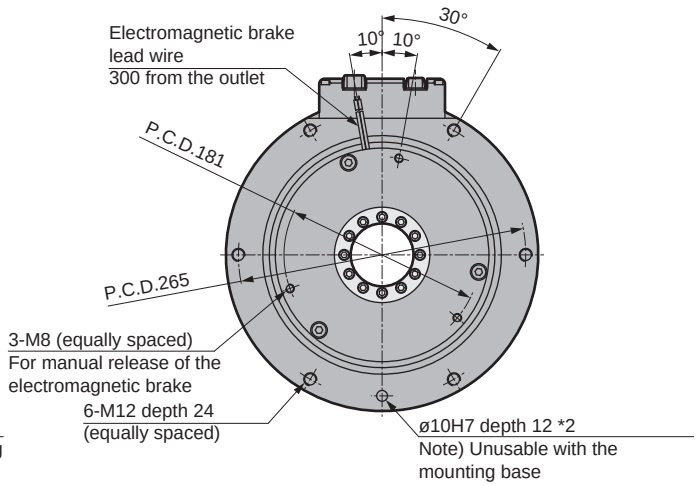

* 1: The actuator origin position may differ from the dimensions. The origin offset function allows you to set an arbitrary home position.
* 2: The position of the positioning pin hole is the same as that of AX4R-300.

Dimensions

● AX4R-500

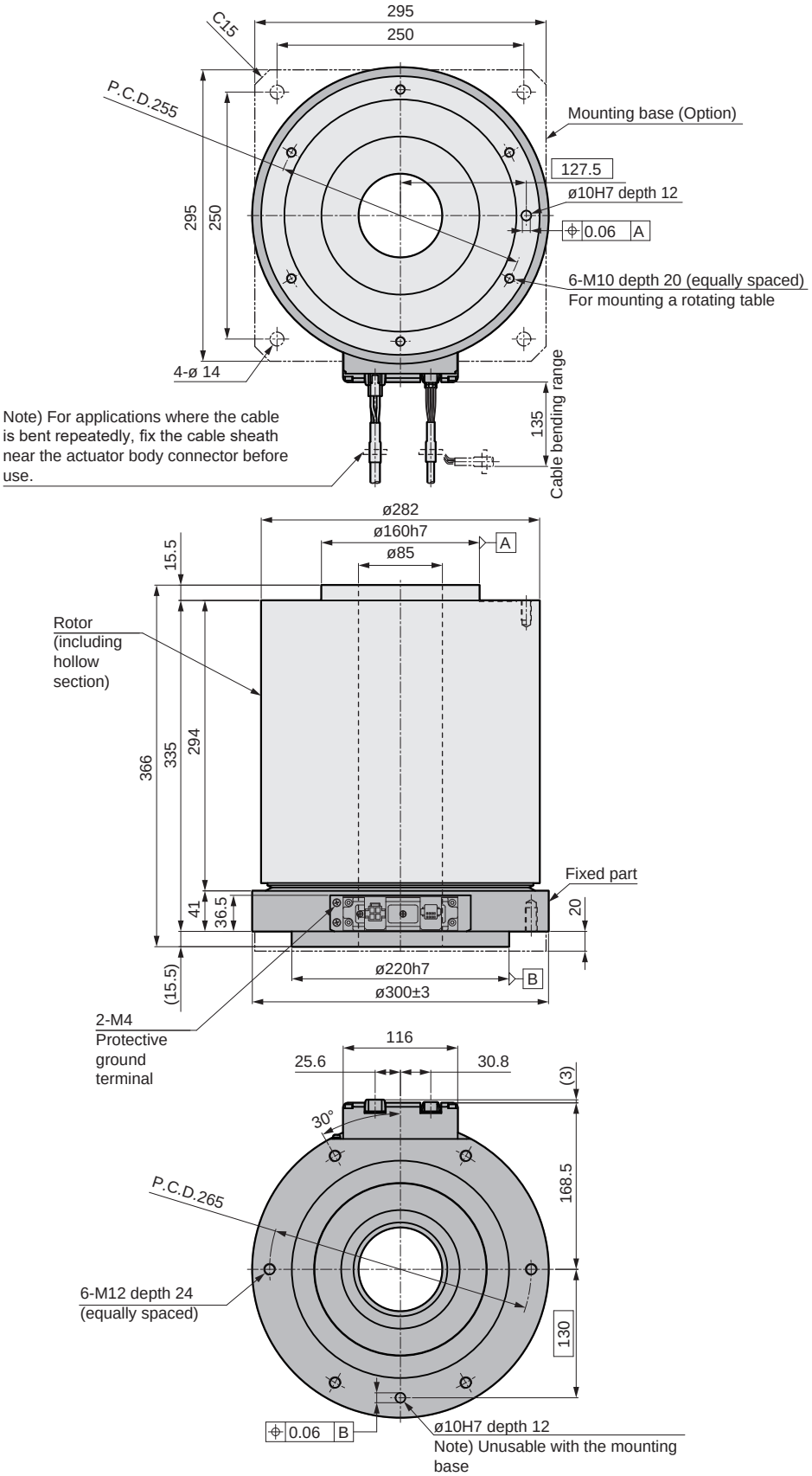

* 1: The actuator origin position may differ from the dimensions. The origin offset function allows you to set an arbitrary home position.

Dimensions

● AX4R-10W

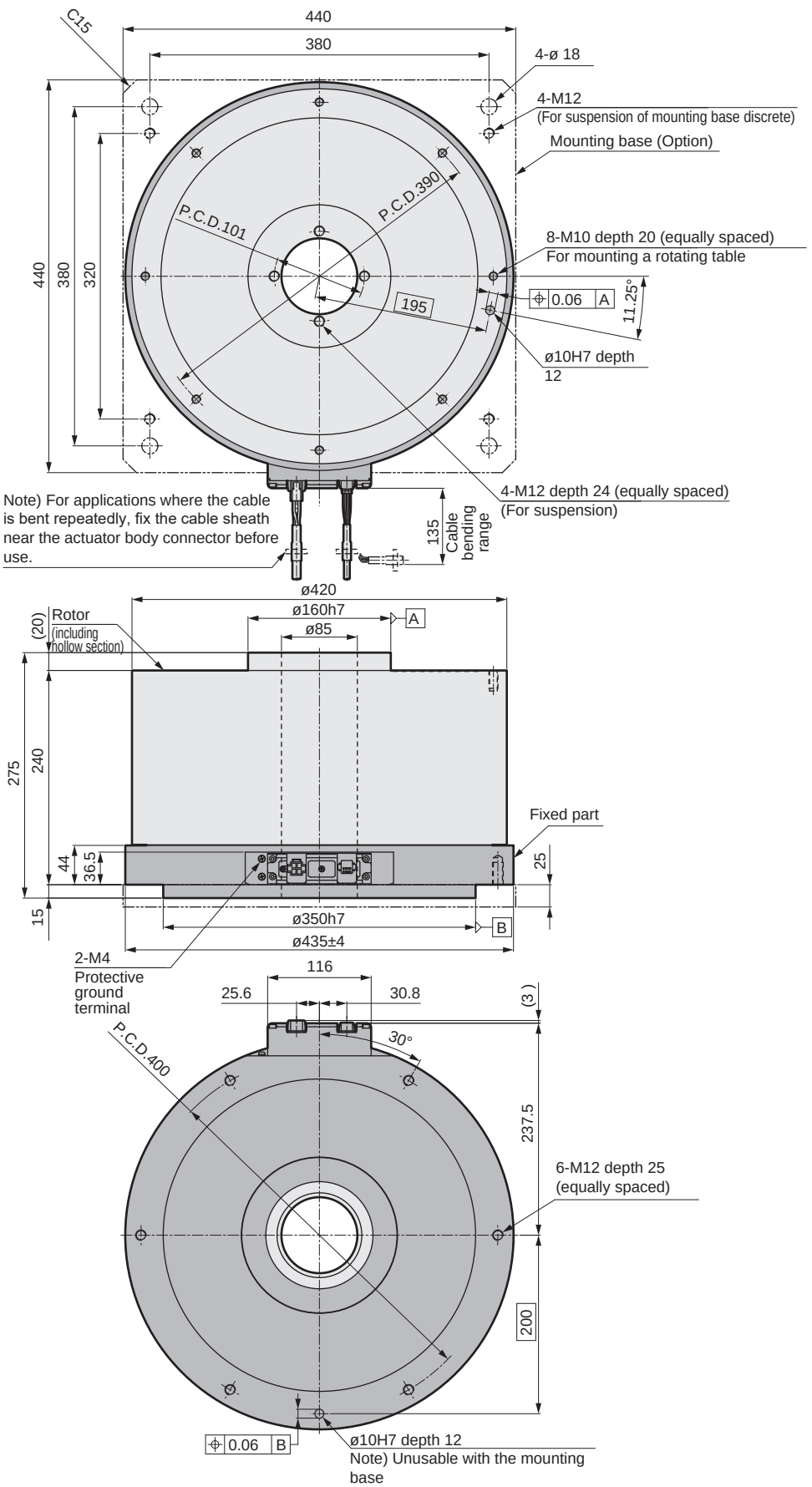

* 1: The actuator origin position may differ from the dimensions. The origin offset function allows you to set an arbitrary home position.

Speed/Maximum torque characteristics

●AX4R-009

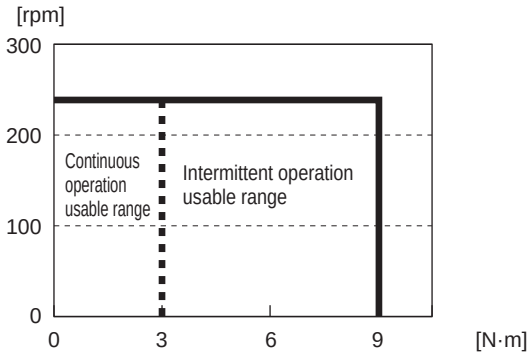

* The graph shows the characteristics of three-phase 200 VAC.

●AX4R-022

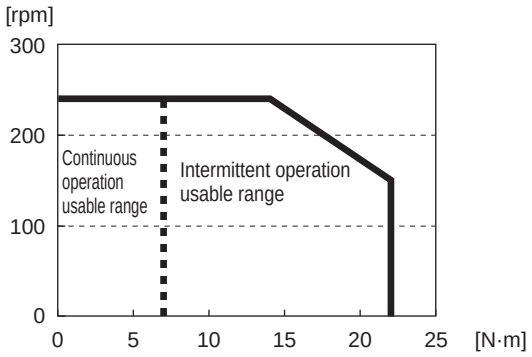

* The graph shows the characteristics of three-phase 200 VAC.

●AX4R-045

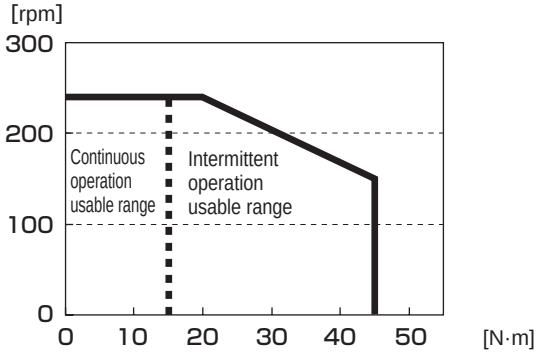

* The graph shows the characteristics of three-phase 200 VAC.

●AX4R-075

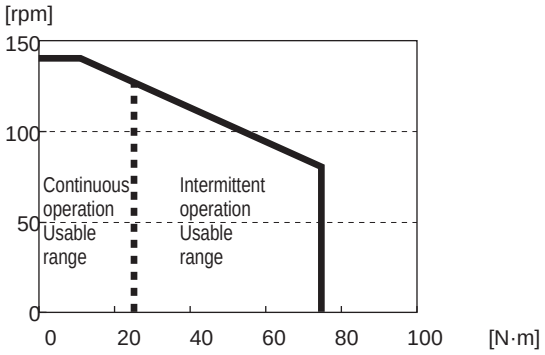

* The graph shows the characteristics of three-phase 200 VAC.

Speed/Maximum torque characteristics

●AX4R-150

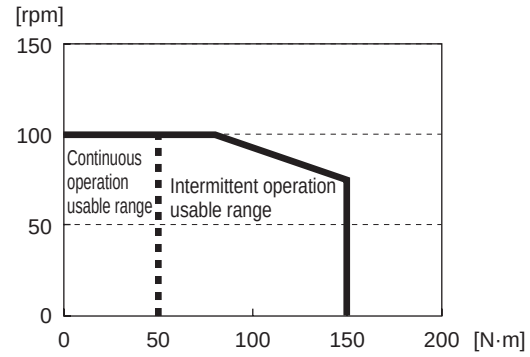

* The graph shows the characteristics of three-phase 200 VAC.

●AX4R-300

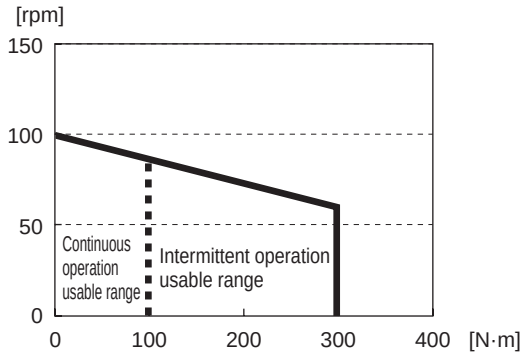

* The graph shows the characteristics of three-phase 200 VAC.

●AX4R-500

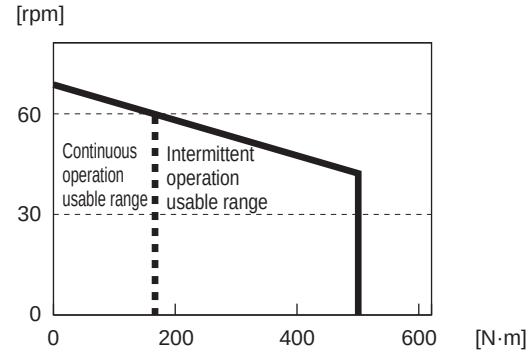

* The graph shows the characteristics of three-phase 200 VAC.

●AX4R-10W

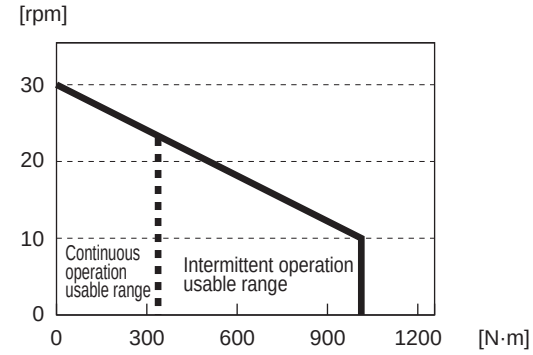

* The graph shows the characteristics of three-phase 200 VAC.

Moment load (simple formula)

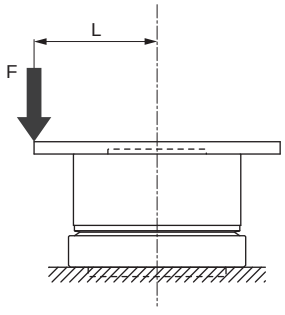

M (N·m)=F (N) x (L) (m)
M: Moment load
F: Load
L: Distance from output shaft center

(Fig. a)

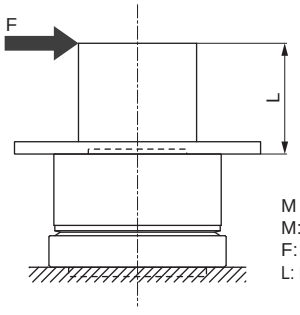

M (N·m)=F (N) x (L+0.02) (m)
M: Moment load
F: Load
L: Distance from output shaft flange surface

(Fig. a)