

Balancer unit
Auto pressure adjustment

BBS-A Series

● Bore size : ø50, ø63, ø80, ø100

RoHS

Specifications

Item \ Model No.	BBS-A-50	BBS-A-63	BBS-A-80	BBS-A-100
Working fluid	Clean compressed air			
Max. working pressure MPa	0.60 (≈87 psi, 6 bar)			
Min. working pressure MPa	0.25 (≈36 psi, 2.5 bar)			
Proof pressure MPa	0.90 (≈130 psi, 9 bar)			
Ambient temperature °C	-5 (23°F) to 50 (122°F) (no freezing)			
Bore size mm	ø50	ø63	ø80	ø100
Max. stroke mm	1500			
Working piston speed mm/s	1 to 200			
Cushion	Rubber cushion			
Lubrication	Not available			
Minimum load range kg	10	16	25	40
Maximum load range *1 kg	70	115	180	285
Operating force N	Refer to page 1269 BBS working force documentation			
Holding force N	1539		3940	

*1 : Refer to page 1269 for details about the maximum load range versus BBS working pressure.

Stroke

Standard stroke (mm)	Max. stroke (mm)	Min. stroke (mm)
100, 200, 300, 400, 500, 600, 700, 800, 900, 1000, 1100, 1200, 1300, 1400, 1500	1500	100

Note : The custom stroke is available in 1 mm increments.

Weight table

(Unit: kg)

Bore size (mm)	Product weight at 0 mm stroke					Additional weight per 100 mm stroke
	Basic (00)	Eye bracket (CA)	Clevis bracket (CB)	Flange FA	Flange FB	
ø50	7.22	7.62	—	8.35	7.56	0.44
ø63	7.52	8.20	—	8.65	8.02	0.52
ø80	10.96	—	11.67	12.88	11.67	0.70
ø100	12.09	—	13.37	14.01	13.44	0.86

How to order

BBS-A - A D 1 - CB - 80 D - 300 - Y

- BBS-A: Automatic pressure adjustment balancer unit
- A: Type
- D: Load direction *1
- 1: Cylinder orientation (Piston rod direction) *1
- CB: Mounting *2
- 80: Bore size
- 300: Stroke
- Y: Accessory *3

Code	Description
A Type	
Blank	Electric (24 VDC)
A	Pneumatic *4
B Load direction	
D	Push type
U	Pull type
C Cylinder orientation (piston rod direction)	
Blank	Downward
1	Upward
2	Horizontal
D Mounting	
OO	Basic
CA	Eye bracket (ø50, ø63) (pin and snap ring attached)
CB	Clevis bracket (ø80, ø100) (pin and snap ring attached)
FA	Rod side flange
FB	Head side flange
E Bore size (mm)	
50	ø50
63	ø63
80	ø80
100	ø100
F Stroke (mm)	
100, 200, 300, 400, 500, 600, 700, 800, 900, 1000, 1100, 1200, 1300, 1400, 1500	
G Accessory	
I	Rod eye
Y	Rod clevis (pin and snap ring attached)

Precautions for model No. selection

*1 : The load direction refers to the input direction of the load to the cylinder.
The cylinder orientation is when installed. Refer to the figure below.
*2 : Mounting bracket will be shipped with the product.
*3 : "I" and "Y" cannot be selected together.
*4 : When the automatic pressure adjustment is selected for the air method, be sure to use the control box (BBS-A-TB Page 1267).

C Cylinder orientation

Load direction push (D)

D (Piston rod downward)	D1 (Piston rod upward)	D2 (Piston rod horizontal)
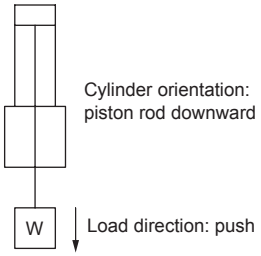	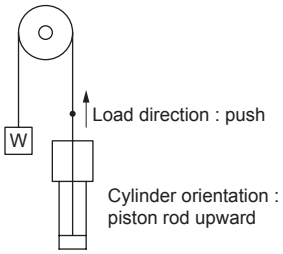	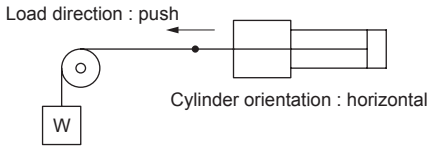

Load direction pull (U)

U (Piston rod downward)	U1 (Piston rod upward)	U2 (Piston rod horizontal)
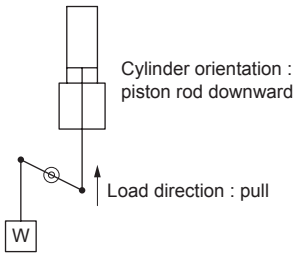	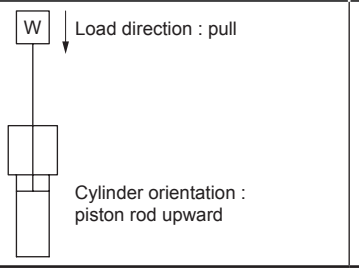	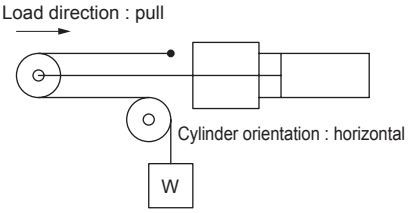

How to order mounting bracket

Bore size (mm) / Mounting bracket	ø50	ø63	ø80	ø100
Flange (FA)	BBS-FA-50	BBS-FA-50	BBS-FA-80	BBS-FA-80
Flange (FB)	SCM-FA-50	SCM-FA-63	SCM-FA-80	SCM-FA-100
Eye bracket (CA)	SCM-CA-50	SCM-CA-63	-	-
Clevis bracket (CB)	-	-	SCM-CB-80	SCM-CB-100

Note : All mounting brackets have mounting bolts attached.

Dimensions

● Basic (00) Load direction push (D)

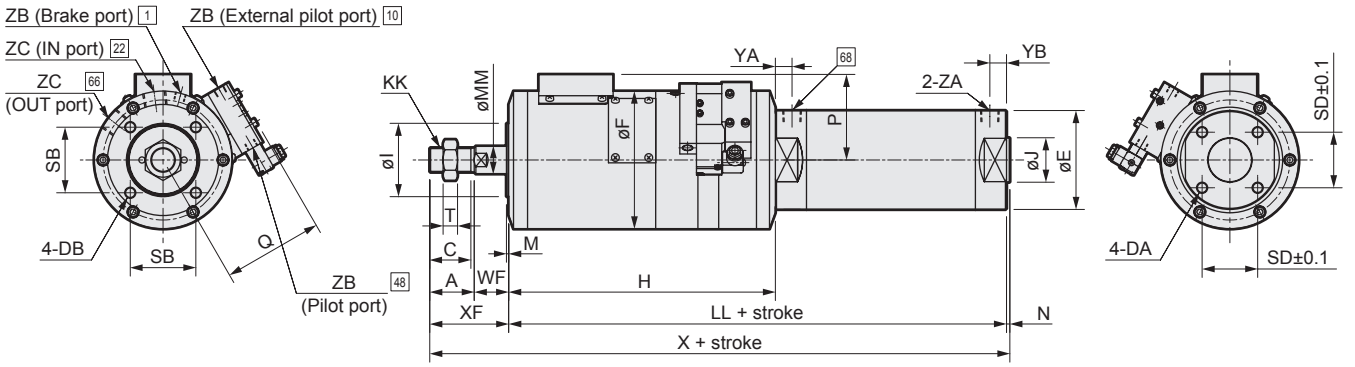

● Basic (00) Load direction pull (U)

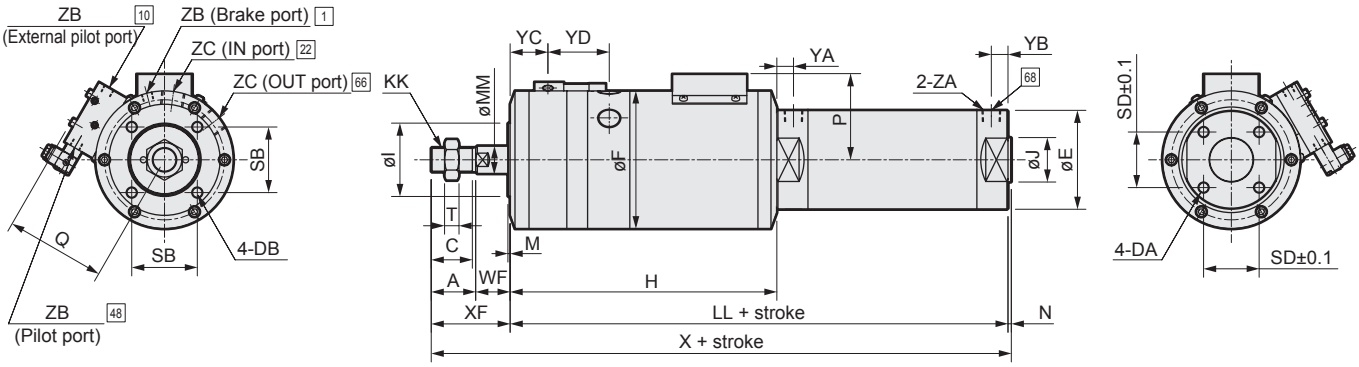

Note : ☐ contains the piping connection number of the air circuit diagram.

Code / Bore size (mm)	A	C	DA	DB	E	F	H	I	J	KK	LL	MM
ø50	35	32	M8 x 1.25 depth 16	M8 x 1.25 depth 15	58	110	224	60	30	M18x1.5	314	20
ø63	35	32	M10 x 1.5 depth 16	M8 x 1.25 depth 15	72	110	224	60	32	M18x1.5	314	20
ø80	40	37	M10 x 1.5 depth 22	M10 x 1.5 depth 15	89	124	240	66	40	M22x1.5	348	25
ø100	40	37	M12 x 1.5 depth 22	M10 x 1.5 depth 15	110	124	240	66	50	M22x1.5	348	25

Code / Bore size (mm)	M	N	P	Q	SB	SD	T	WF	X	XF	YA	YB	YC	YD	ZA	ZB	ZC
ø50	2	2	57	81	50	32	11	23	374	58	15	12	32	52	Rc1/4	Rc1/8	Rc3/8
ø63	2	2	57	81	50	38	11	23	374	58	15	12	32	52	Rc1/4	Rc1/8	Rc3/8
ø80	2	3	77	90	59	50	13	31	422	71	15	15	34	55.7	Rc3/8	Rc1/8	Rc1/2
ø100	2	3	77	90	59	60	13	31	422	71	15	15	34	55.7	Rc1/2	Rc1/8	Rc1/2

Dimensions

● Eye bracket (CA) Load direction push (D)

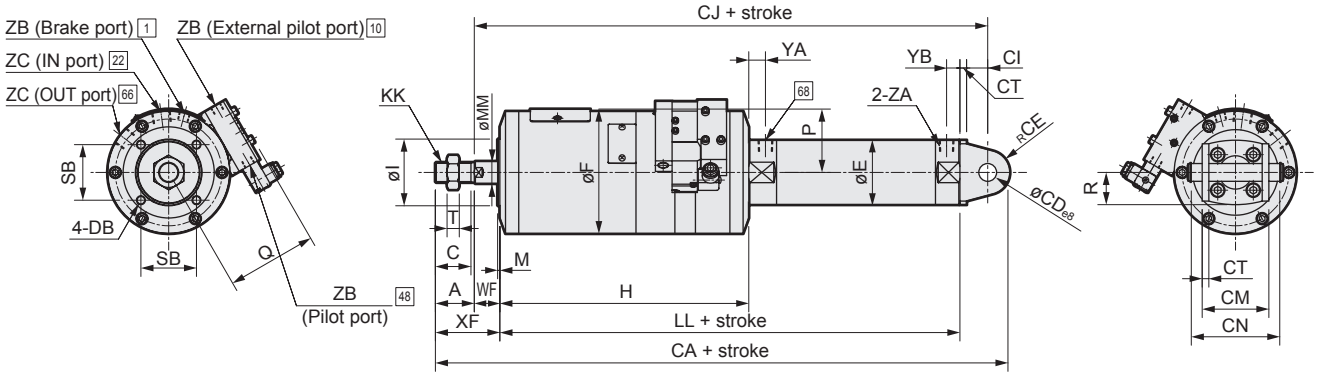

● Eye bracket (CA) Load direction pull (U)

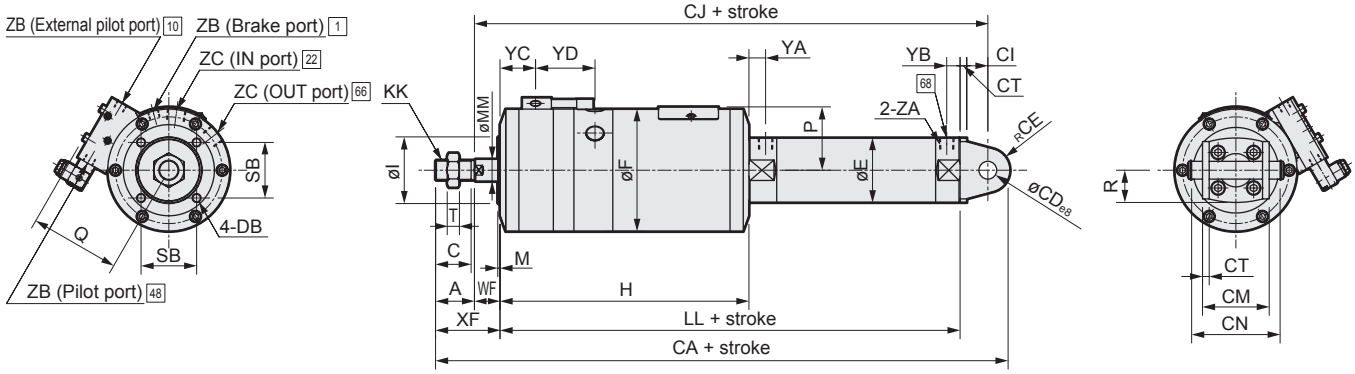

Note : □ contains the piping connection number of the air circuit diagram.

Code / Bore size (mm)	A	C	DB	E	F	H	I	KK	LL	MM	M	P	Q	R	SB	T
ø50	35	32	M8 x 1.25 depth 15	58	110	224	60	M18x1.5	314	20	2	57	81	29	50	11
ø63	35	32	M8 x 1.25 depth 15	72	110	224	60	M18x1.5	314	20	2	57	81	36	50	11

Code / Bore size (mm)	WF	XF	CA	CD	CE	CI	CT	CJ	CM	CN	YA	YB	YC	YD	ZA	ZB	ZC
ø50	23	58	417	16	20	19	6	362	60	79.6	15	12	32	52	Rc1/4	Rc1/8	Rc3/8
ø63	23	58	424	18	22	22	8	367	74	97.8	15	12	32	52	Rc1/4	Rc1/8	Rc3/8

Dimensions

● Clevis bracket (CB) Load direction push (D)

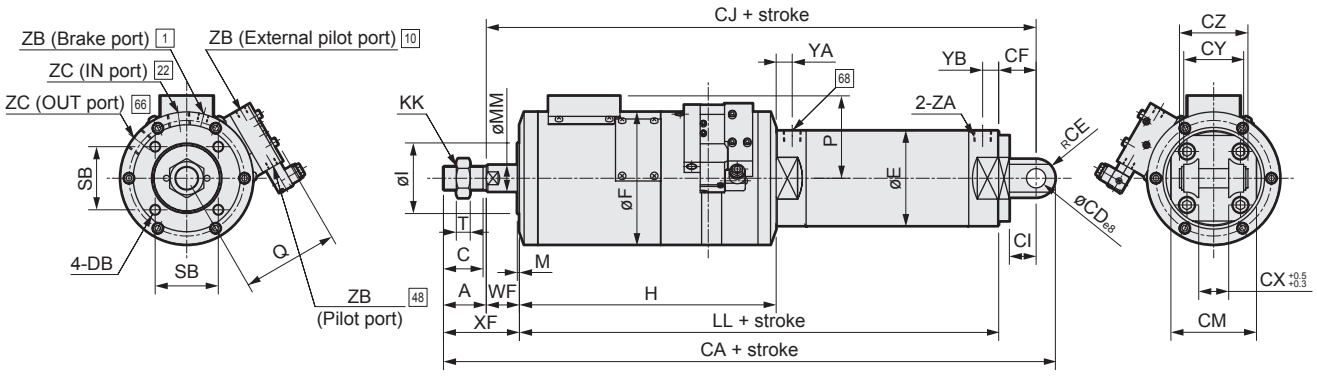

● Clevis bracket (CB) Load direction pull : (U)

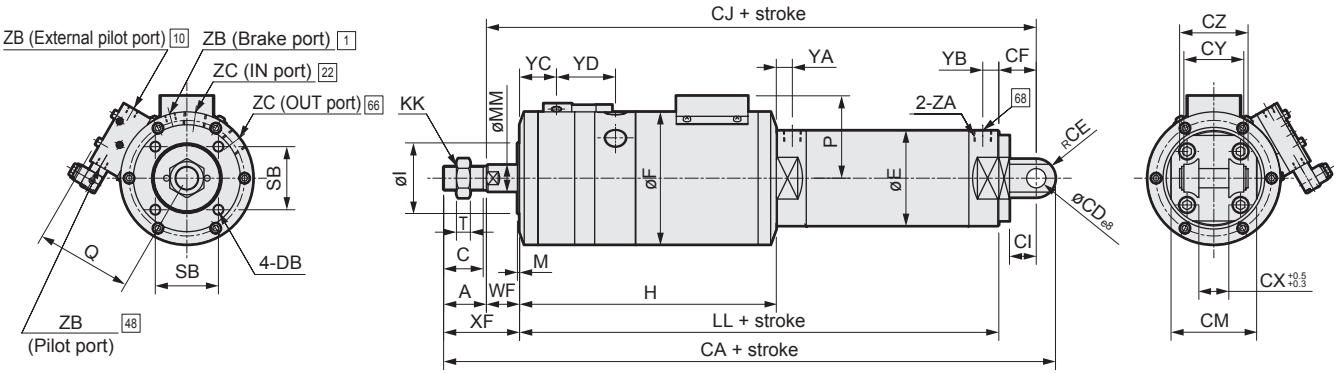

Note : □ contains the piping connection number of the air circuit diagram.

Code / Bore size (mm)	A	C	DB	E	F	H	I	KK	LL	MM	M	P	Q	SB	T
ø80	40	37	M10 x 1.5 depth 15	89	124	240	66	M22x1.5	348	25	2	77	90	59	13
ø100	40	37	M10 x 1.5 depth 15	110	124	240	66	M22x1.5	348	25	2	77	90	59	13

Code / Bore size (mm)	WF	XF	CA	CD	CE	CF	CI	CJ	CM	CX	CY	CZ	YA	YB	YC	YD	ZA	ZB	ZC
ø80	31	71	472	18	18	35	25	414	80	28	56	64	15	15	34	55.7	Rc3/8	Rc1/8	Rc1/2
ø100	31	71	484	22	22	43	31	422	100	32	64	72	15	15	34	55.7	Rc1/2	Rc1/8	Rc1/2

Dimensions

● Rod side flange (FA) Load direction push (D)

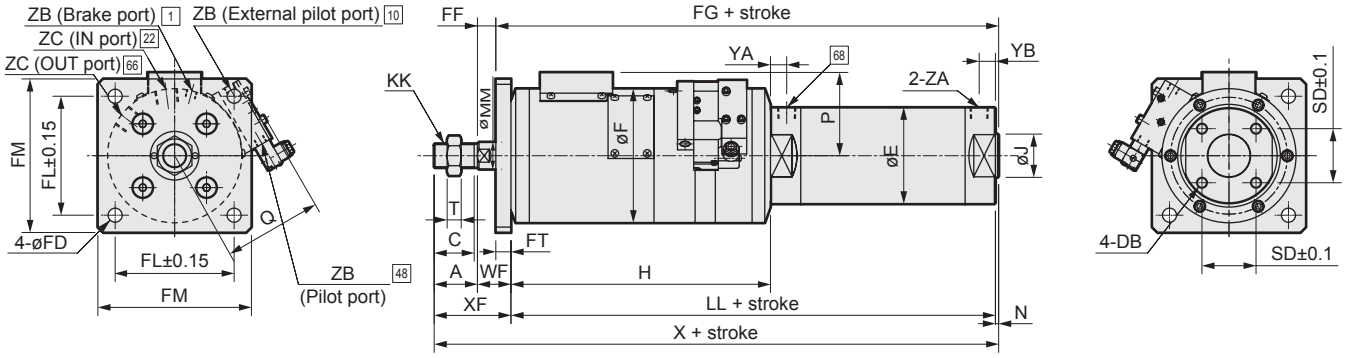

● Rod side flange (FA) Load direction pull : (U)

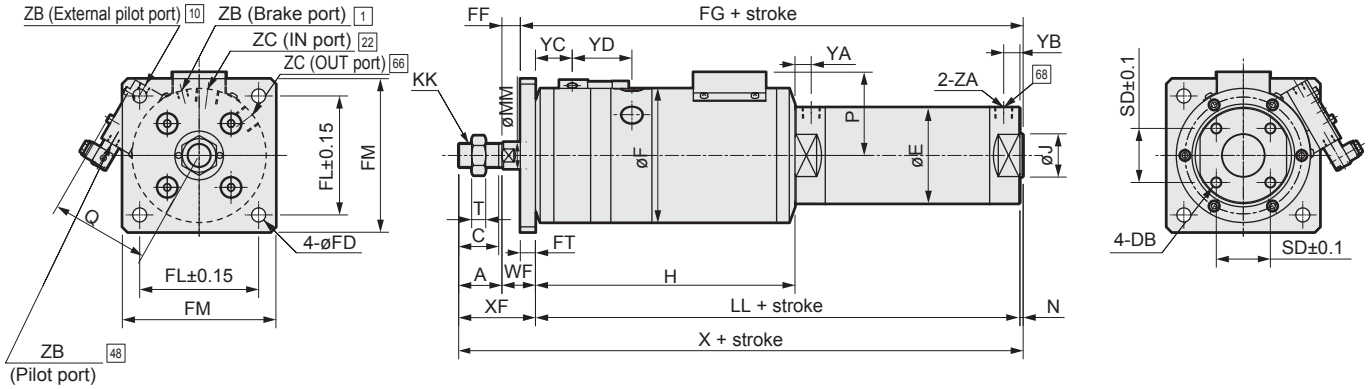

Note : □ contains the piping connection number of the air circuit diagram.

Code / Bore size (mm)	A	C	DB	E	F	H	J	KK	LL	MM	N	P	Q	SD
ø50	35	32	M8 x 1.25 depth 16	58	110	224	30	M18x1.5	314	20	2	57	81	32
ø63	35	32	M10 x 1.5 depth 16	72	110	224	32	M18x1.5	314	20	2	57	81	38
ø80	40	37	M10 x 1.5 depth 22	89	124	240	40	M22x1.5	348	25	3	77	90	50
ø100	40	37	M12x1.75 depth 22	110	124	240	50	M22x1.5	348	25	3	77	90	60

Code / Bore size (mm)	T	WF	X	XF	FD	FF	FG	FL	FM	FT	YA	YB	YC	YD	ZA	ZB	ZC
ø50	11	23	374	58	11	11	328	95	120	12	15	12	32	52	Rc1/4	Rc1/8	Rc3/8
ø63	11	23	374	58	11	11	328	95	120	12	15	12	32	52	Rc1/4	Rc1/8	Rc3/8
ø80	13	31	422	71	13	17	365	110	142	14	15	15	34	55.7	Rc3/8	Rc1/8	Rc1/2
ø100	13	31	422	71	13	17	365	110	142	14	15	15	34	55.7	Rc1/2	Rc1/8	Rc1/2

Dimensions

● Head side flange (FB) Load direction push (D)

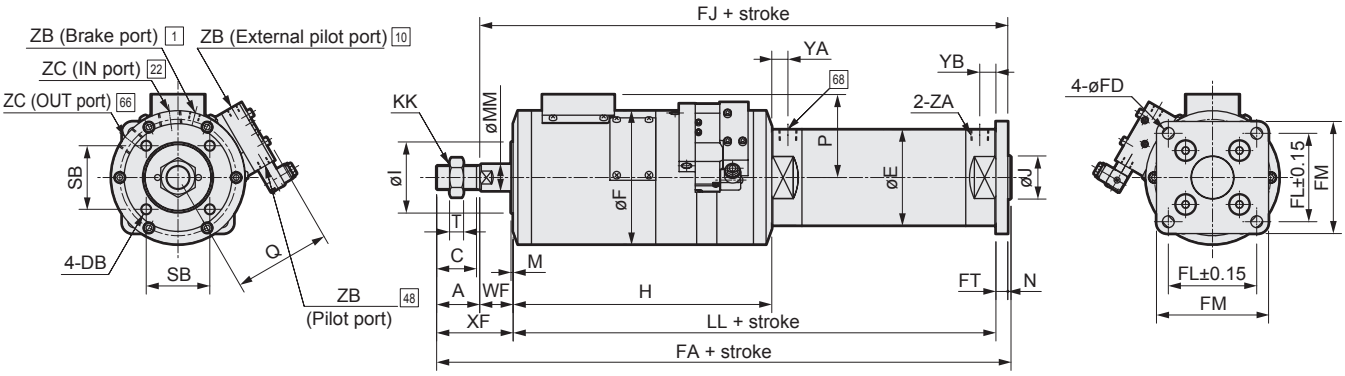

● Head side flange (FB) Load direction pull : (U)

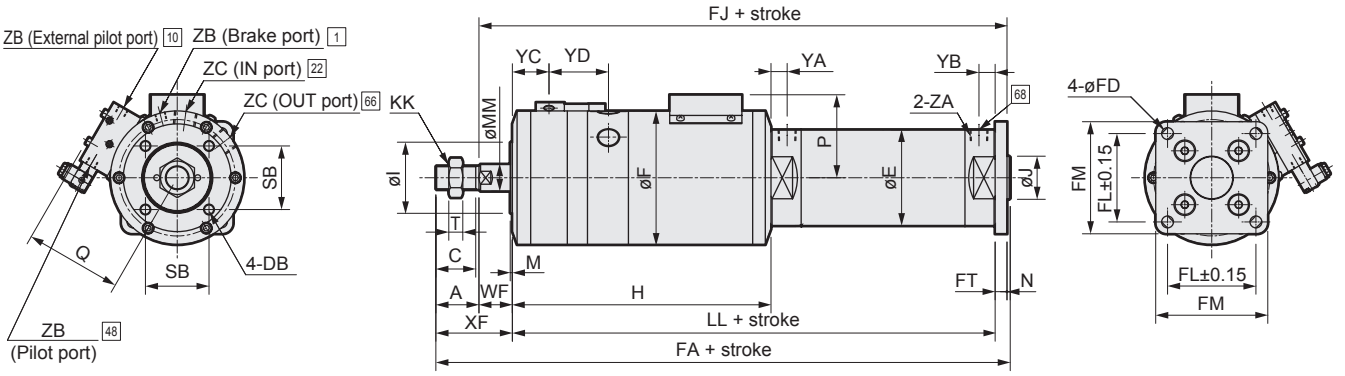

Note : ☐ contains the piping connection number of the air circuit diagram.

Code / Bore size (mm)	A	C	DB	E	F	H	I	J	KK	LL	MM	M	N	P	Q
ø50	35	32	M8 x 1.25 depth 15	58	110	224	60	30	M18x1.5	314	20	2	2	57	81
ø63	35	32	M8 x 1.25 depth 15	72	110	224	60	32	M18x1.5	314	20	2	2	57	81
ø80	40	37	M10 x 1.5 depth 15	89	124	240	66	40	M22x1.5	348	25	2	3	77	90
ø100	40	37	M10 x 1.5 depth 15	110	124	240	66	50	M22x1.5	348	25	2	3	77	90

Code / Bore size (mm)	SB	T	WF	XF	FA	FD	FJ	FL	FM	FT	YA	YB	YC	YD	ZA	ZB	ZC
ø50	50	11	23	58	383	9	346	58	76	9	15	12	32	52	Rc1/4	Rc1/8	Rc3/8
ø63	50	11	23	58	383	11	346	70	92	9	15	12	32	52	Rc1/4	Rc1/8	Rc3/8
ø80	59	13	31	71	433	11	390	82	104	11	15	15	34	55.7	Rc3/8	Rc1/8	Rc1/2
ø100	59	13	31	71	436	13	393	100	128	14	15	15	34	55.7	Rc1/2	Rc1/8	Rc1/2

Control box (for electric)

How to order

BBS-A - **ETB**

- BBS-A: Auto pressure adjustment balancer unit
- ETB: Control box

Custom-made circuits are available to suit customer usage criteria. Contact CKD for details.

Dimensions

● Control box (BBS-A-ETB)

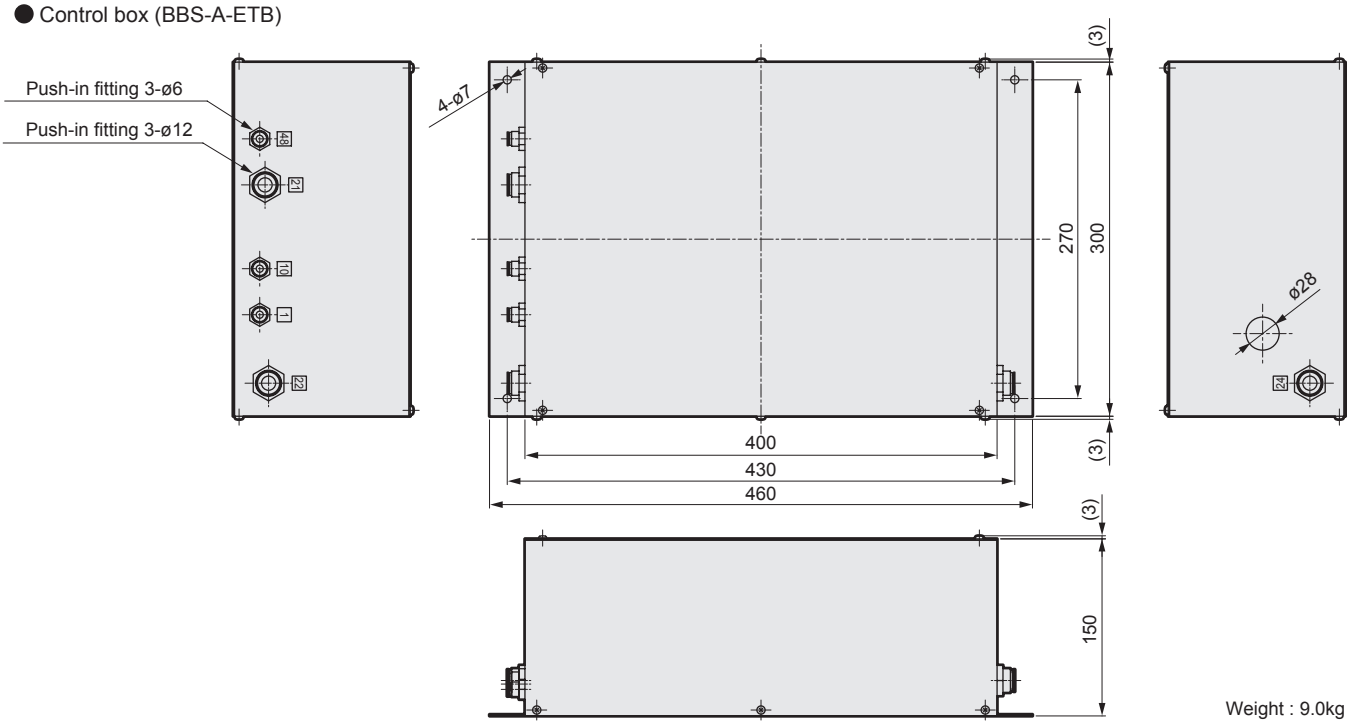

Weight : 9.0kg

Air circuit diagram

● Control box
(BBS-A-ETB) Air circuit diagram

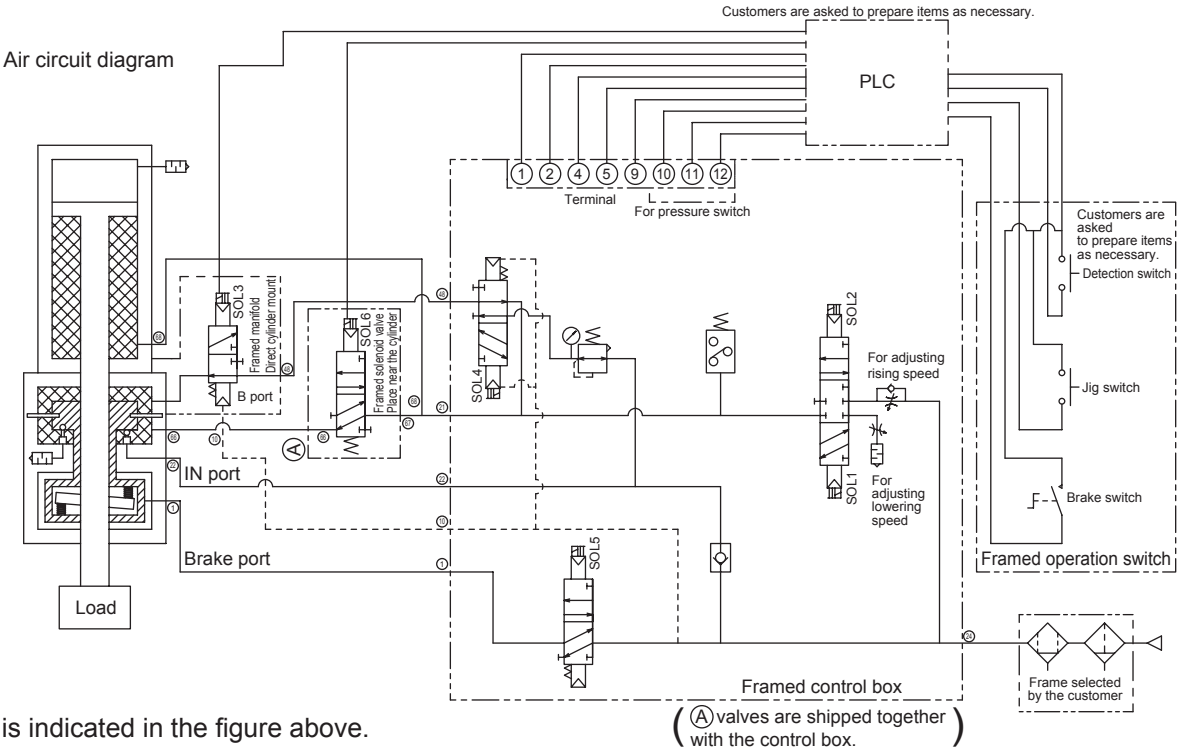

D (push load) is indicated in the figure above.
For U (pull load), the piping to the cylinder is on the head side.

Control box (for electric, 2-stage speed switchable)

How to order

BBS-A - **ETB2**

- BBS-A: Auto pressure adjustment balancer unit
- ETB2: Control box

Custom-made circuits are available to suit customer usage criteria. Contact CKD for details.

Dimensions

● Same as control box (BBS-A-ETB). Refer to page 1265.

Weight: 9.5kg

Air circuit diagram

● Control box (BBS-A-ETB2) air circuit diagram

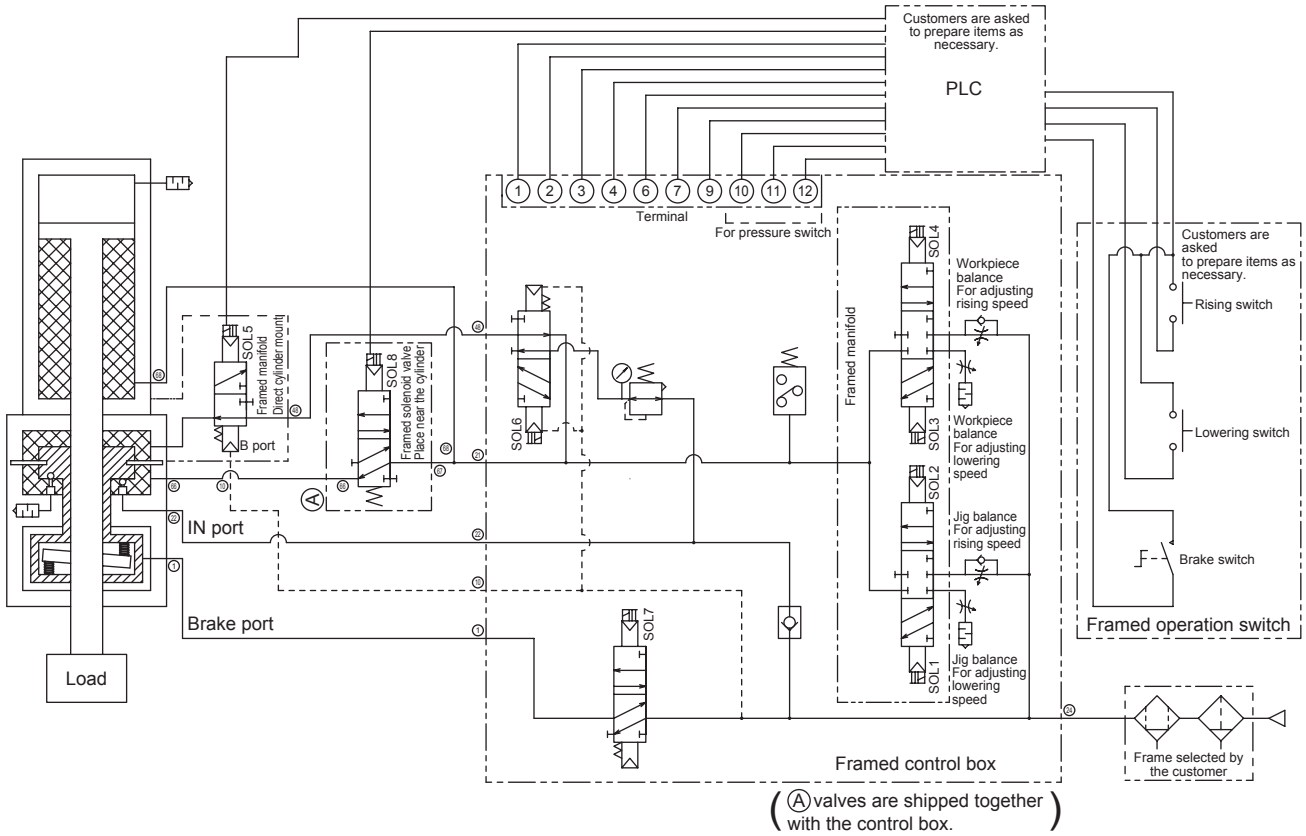

D (push load) is indicated in the figure above.
For U (pull load), the piping to the cylinder is on the head side.

Control box (for pneumatic)

How to order

BBS-A - **TB**

- BBS-A: Automatic pressure adjustment balancer unit
- TB: Control box

Custom-made circuits are available to suit customer usage criteria. Contact CKD for details.

Dimensions

● Control box (BBS-A-TB)

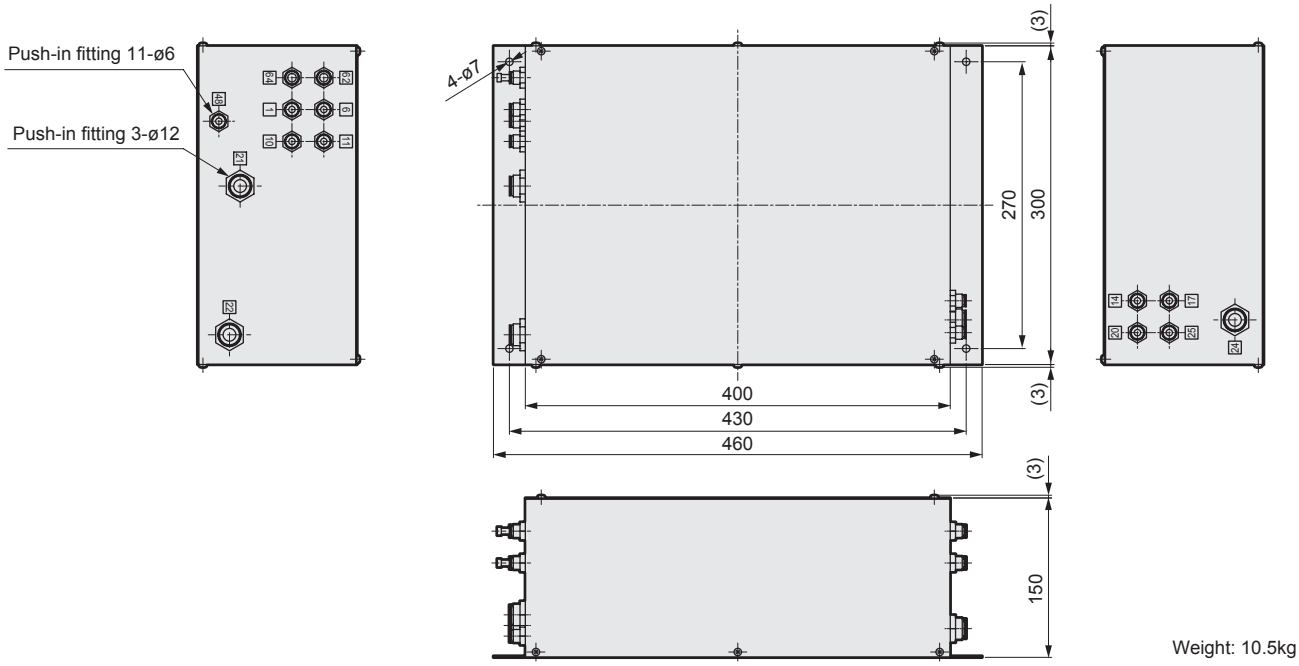

Weight: 10.5kg

Air circuit diagram

● Control box (BBS-A-TB) air circuit diagram

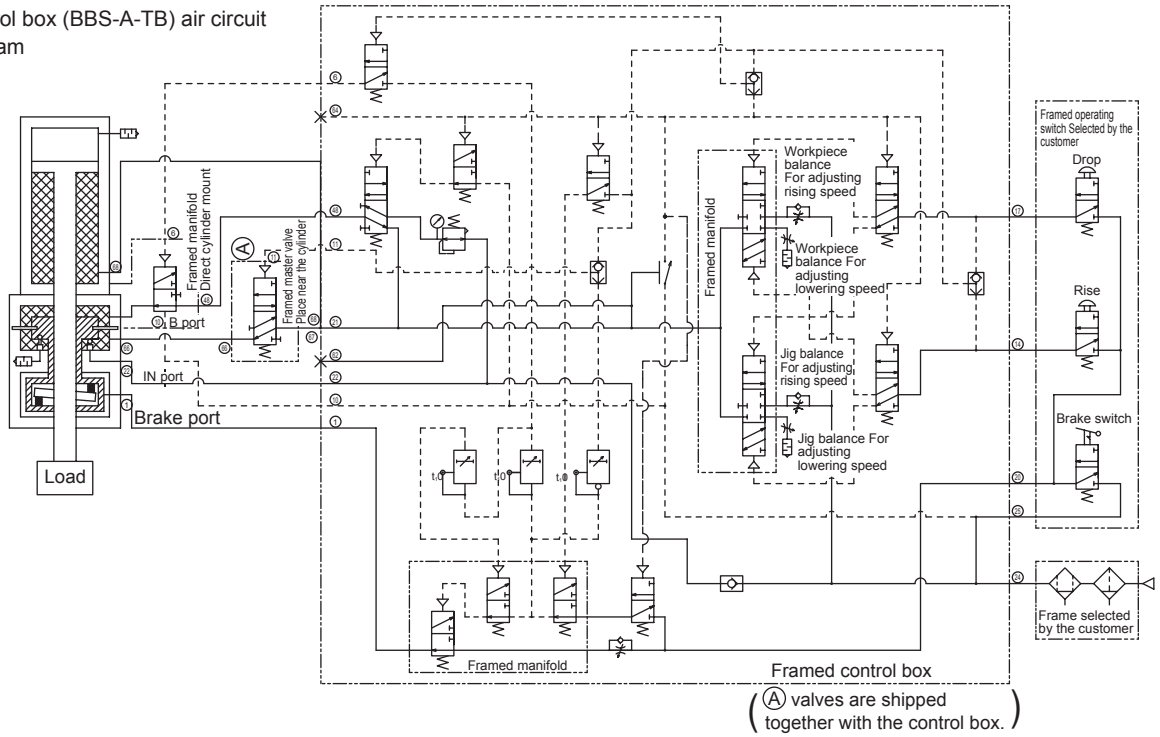

D (push load) is indicated in the figure above.
For U (pull load), the piping to the cylinder is on the head side.

Operation switch (for pneumatic type)

How to order

BBS - **CSW** - **R**

Balancer Unit

Operation switch

Code	Description
Ⓐ Type	
P	Push type
H	Hand
R	Lever
G	Grip

Operation switch outline drawing

● Push type (BBS-CSW-P)

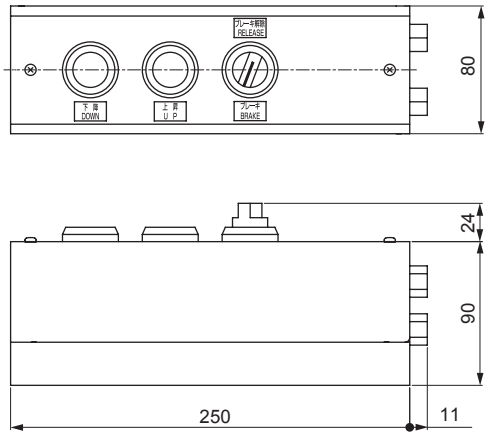

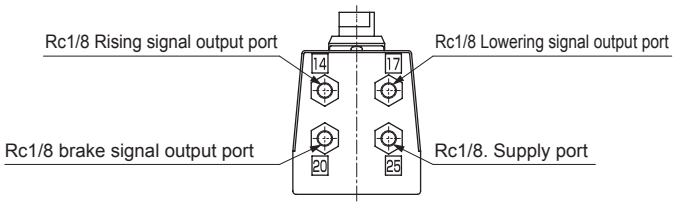

Weight: 1.4kg

● Hand (BBS-CSW-H)

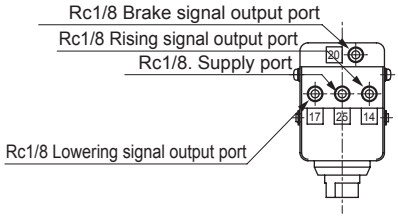

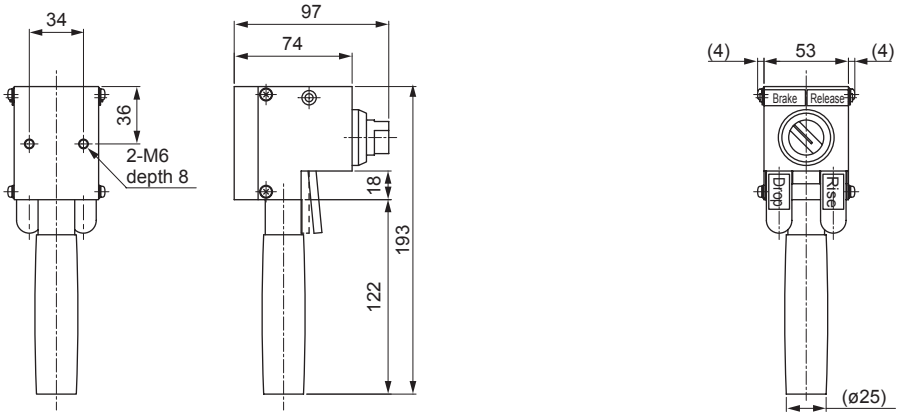

Weight: 1.0kg

Operation switch outline drawing

● Lever (BBS-CSW-R)

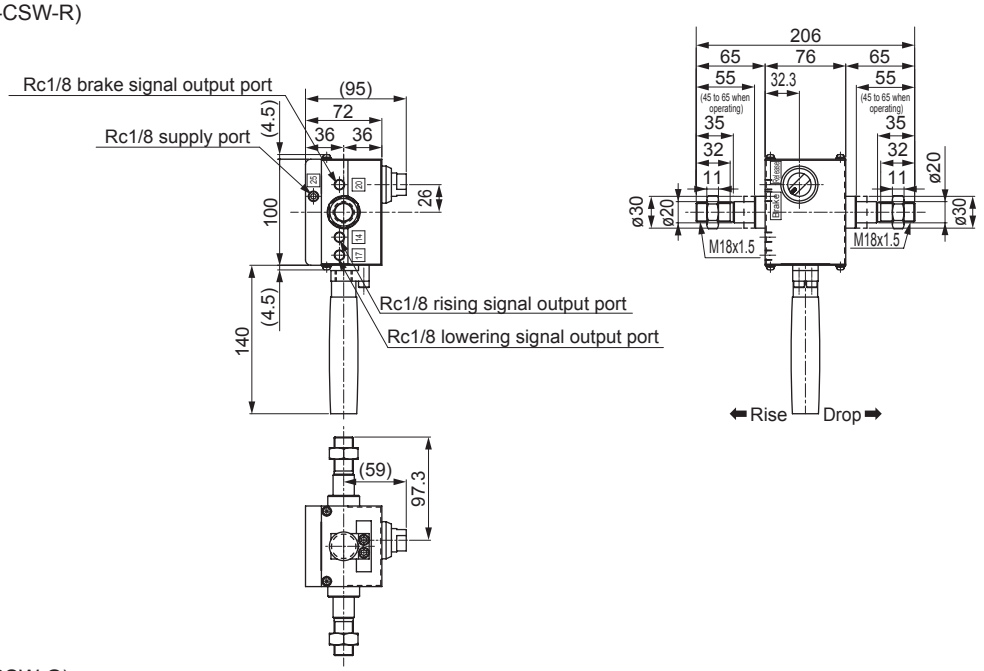

Weight : 2.0kg

● Grip (BBS-CSW-G)

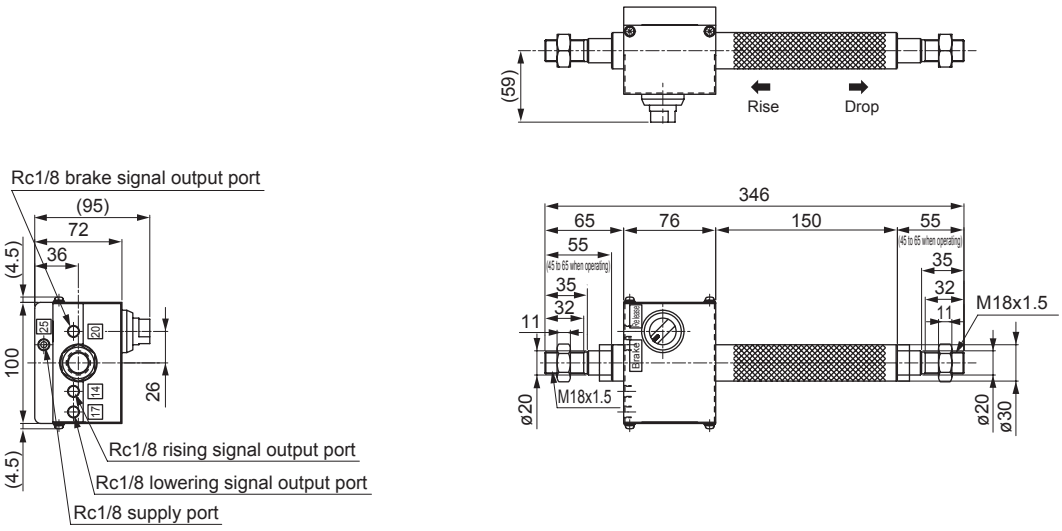

Weight : 2.5kg

Assemble the lever and grip operation switch to the piston rod before use.
Adapters for assembly are also available. Contact CKD.

Operating force

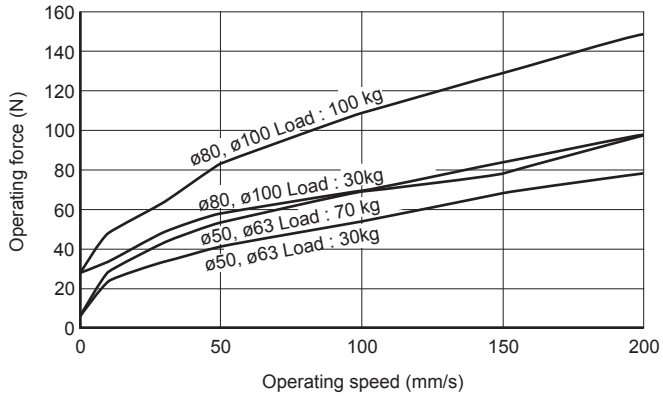

Maximum load range versus working pressure

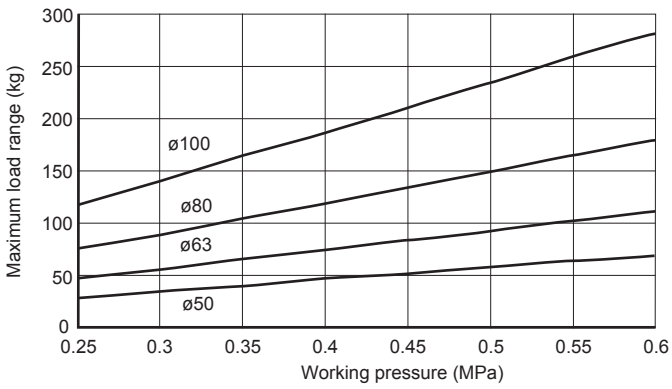

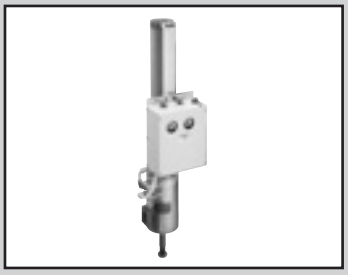

Balancer unit
Fixed pressure adjustment
Control box separate

BBS-O Series

Control box integrated

BBS-OB Series

● Bore size : ø50, ø63, ø80, ø100

RoHS

Specifications

Item \ Model No.	BBS-O-50	BBS-O-63	BBS-O-80	BBS-O-100
Working fluid	Clean compressed air			
Max. working pressure MPa	0.60 (≈87 psi, 6 bar)			
Min. working pressure MPa	0.25 (≈36 psi, 2.5 bar)			
Proof pressure MPa	0.90 (≈130 psi, 9 bar)			
Ambient temperature °C	-5 (23°F) to 50 (122°F) (no freezing)			
Bore size mm	ø50	ø63	ø80	ø100
Max. stroke mm	1500			
Working piston speed mm/s	1 to 200			
Cushion	Rubber cushion			
Lubrication	Not available			
Minimum load range kg	10	16	25	40
Maximum load range *1 kg	70	115	180	285
Operating force N	Refor to page 1269 BBS working force documentation			
Holding force N	1539		3940	

*1 : Refer to page 1269 for details about the maximum load range versus BBS working pressure.

Stroke

Model	Standard stroke (mm)	Max. stroke (mm)	Min. stroke (mm)
BBS-O	100, 200, 300, 400, 500, 600, 700, 800, 900, 1000, 1100, 1200, 1300, 1400, 1500	1500	100
BBS-OB	300, 400, 500, 600, 700, 800, 900, 1000, 1100, 1200, 1300, 1400, 1500	1500	300

Note : The custom stroke is available in 1 mm increments.

Weight table

● Control box separate BBS-O (Unit : kg)

Bore size (mm)	Product weight at 0 mm stroke					Additional weight per 100 mm stroke
	Basic (00)	Eye bracket (CA)	Clevis bracket (CB)	Flange FA	Flange FB	
ø50	7.22	7.62	—	8.35	7.56	0.44
ø63	7.52	8.20	—	8.65	8.02	0.52
ø80	10.96	—	11.67	12.88	11.67	0.70
ø100	12.09	—	13.37	14.01	13.44	0.86

● Control box integrated BBS-OB (Unit : kg)

Bore size (mm)	Product weight at 0 mm stroke					Additional weight per 100 mm stroke
	Basic (00)	Eye bracket (CA)	Clevis bracket (CB)	Flange FA	Flange FB	
ø50	11.14	11.54	—	12.27	11.48	0.58
ø63	11.44	12.12	—	12.57	11.94	0.66
ø80	14.78	—	15.49	16.70	15.49	0.84
ø100	15.91	—	17.19	17.83	17.26	1.00

How to order

BBS-O - D - CB - 80 D - 300 - Y

Code	Description
A Model No.	
BBS-O	Control box separate (*5)
BBS-OB	Control box integrated
B Load direction	
D	Push type
U	Pull type
C Mounting	
OO	Basic
CA	Eye bracket (ø50, ø63) (pin and snap ring attached)
CB	Clevis bracket (ø80, ø100) (pin and snap ring attached)
FA	Rod side flange
FB	Head side flange
D Bore size (mm)	
50	ø50
63	ø63
80	ø80
100	ø100
E Stroke (mm)	
	100, 200, 300, 400, 500, 600, 700, 800, 900, 1000, 1100, 1200, 1300, 1400, 1500
F Accessory	
I	Rod eye
Y	Rod clevis (pin and snap ring attached)

A Model No.
B Load direction *1
C Mounting *2
D Bore size
E Stroke *3
F Accessory *4

⚠ Precautions for model No. selection

*1 : The load direction refers to the input direction of the load to the cylinder.
*2 : Mounting bracket will be shipped with the product.
*3 : The min. stroke of BBS-OB is 300 mm.
*4 : "I" and "Y" cannot be selected together.
*5 : BBS-O control boxes are attached separately. Connect them to the cylinder yourself.

How to order mounting bracket

Bore size (mm) / Mounting bracket	ø50	ø63	ø80	ø100
Flange (FA)	BBS-FA-50	BBS-FA-50	BBS-FA-80	BBS-FA-80
Flange (FB)	SCM-FA-50	SCM-FA-63	SCM-FA-80	SCM-FA-100
Eye bracket (CA)	SCM-CA-50	SCM-CA-63	—	—
Clevis bracket (CB)	—	—	SCM-CB-80	SCM-CB-100

*1 : All mounting brackets have mounting bolts attached.

Dimensions

● Control box separated, basic (00), load direction push : (D)

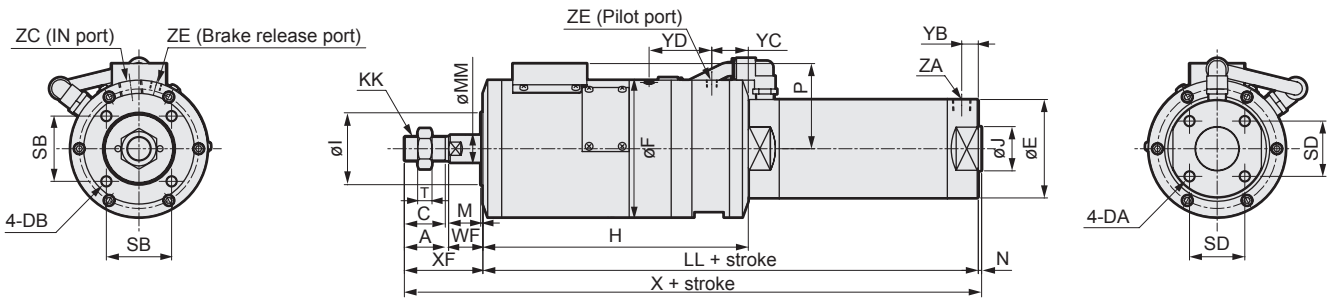

● Control box separated, basic (00), load direction pull : (U)

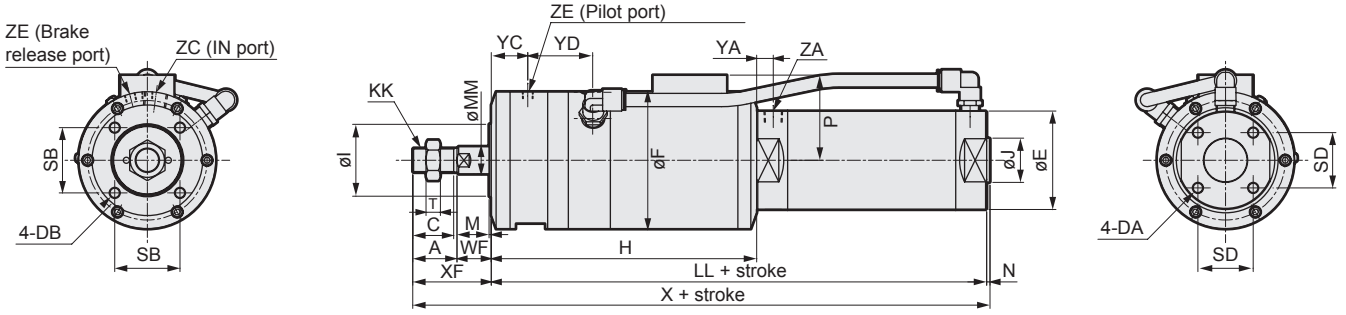

Code / Bore size (mm)	A	C	DA	DB	E	F	H	I	J	KK	LL	MM	M	N
ø50	35	32	M8 x 1.25 depth 16	M8 x 1.25 depth 15	58	110	224	60	30	M18x1.5	314	20	2	2
ø63	35	32	M10 x 1.5 depth 16	M8 x 1.25 depth 15	72	110	224	60	32	M18x1.5	314	20	2	2
ø80	40	37	M10 x 1.5 depth 22	M10 x 1.5 depth 15	89	124	240	66	40	M22x1.5	348	25	2	3
ø100	40	37	M12 x 1.5 depth 22	M10 x 1.5 depth 15	110	124	240	66	50	M22x1.5	348	25	2	3

Code / Bore size (mm)	P	SB	SD	T	WF	X	XF	YA	YB	YC	YD	ZA	ZE	ZC
ø50	57	50	32	11	23	374	58	15	12	37	48.5	Rc1/4	Rc1/8	Rc3/8
ø63	57	50	38	11	23	374	58	15	12	37	48.5	Rc1/4	Rc1/8	Rc3/8
ø80	77	59	50	13	31	422	71	15	15	33	56.7	Rc3/8	Rc1/8	Rc1/2
ø100	77	59	60	13	31	422	71	15	15	33	56.7	Rc1/2	Rc1/8	Rc1/2

● Control box (included) (weight : 3.7 kg)

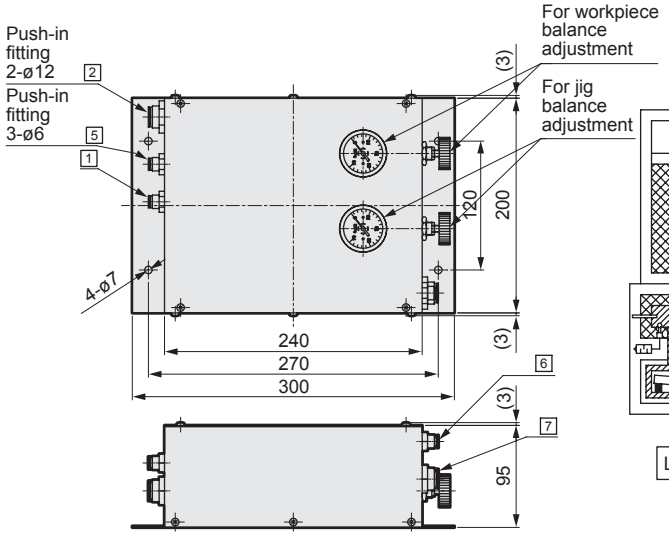

● Air circuit diagram

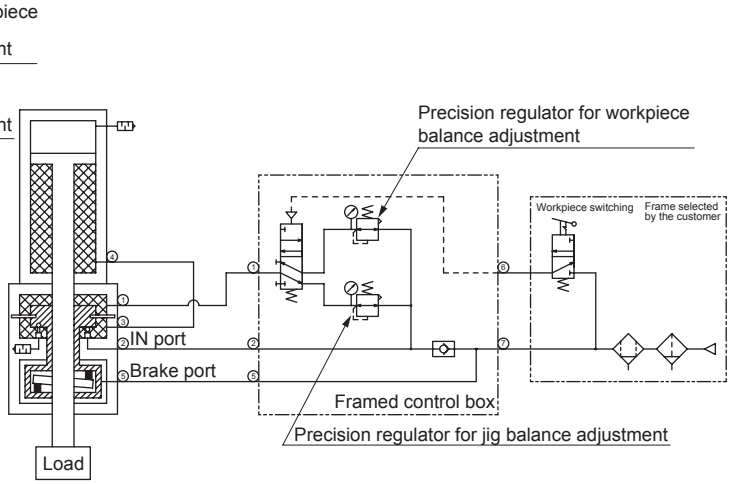

Mounting dimensions of each mounting are the same as BBS-A. Refer to pages 1261 to 1264.

Dimensions

● Control box integrated, basic (00), load direction push : (D)

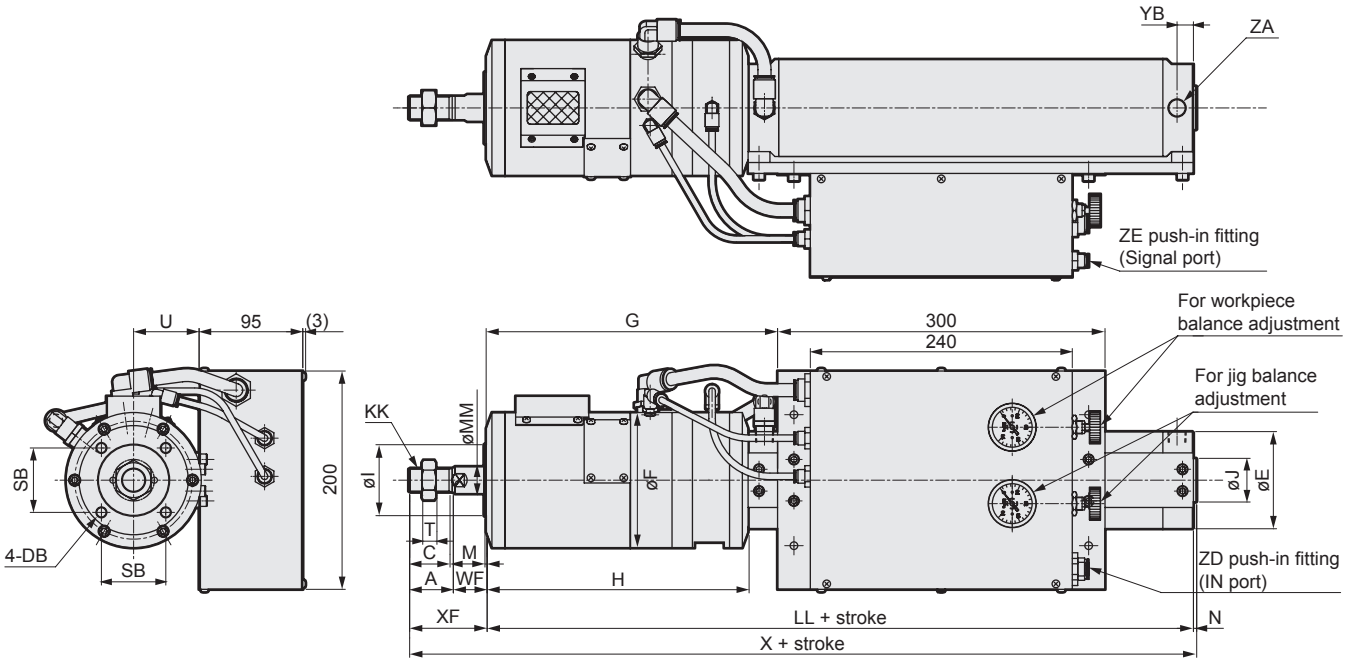

● Control box integrated, basic (00), load direction pull : (U)

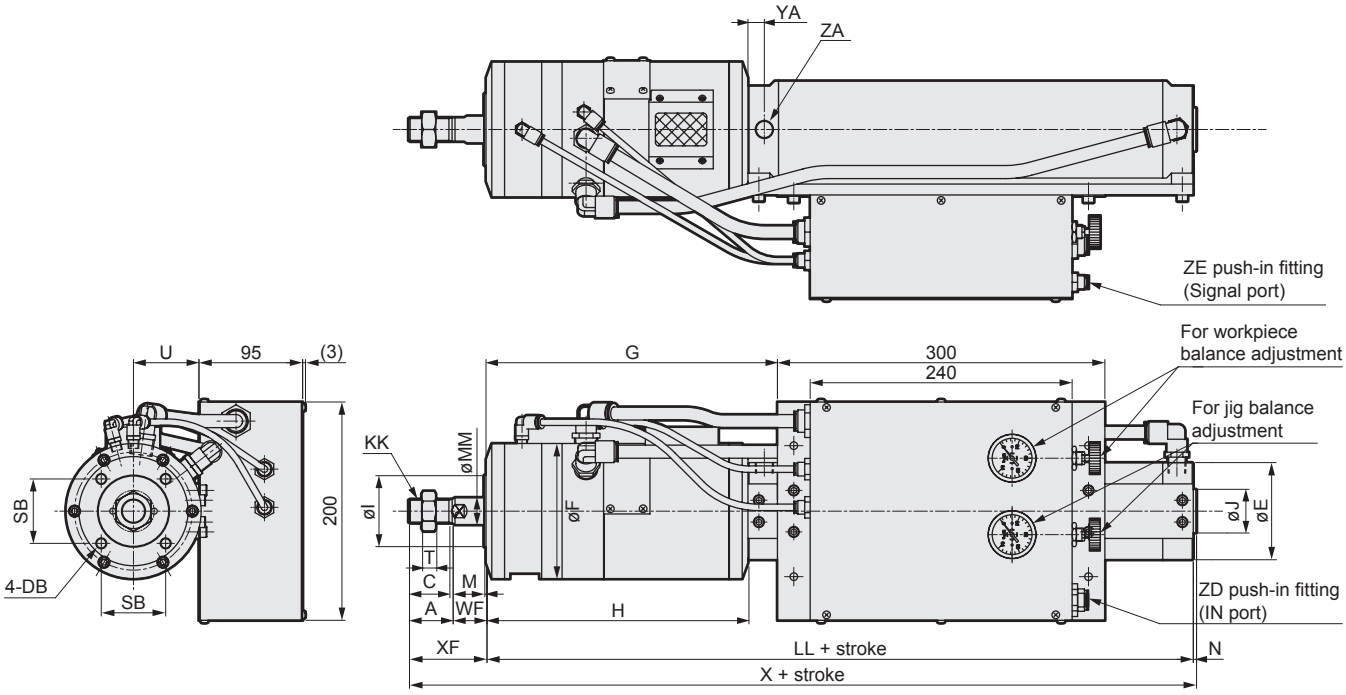

Code / Bore size (mm)	A	C	(DA)	DB	E	F	G	H	I	J	KK	LL
ø50	35	32	M8 x 1.25 depth 16	M8 x 1.25 depth 15	58	110	248	224	60	30	M18x1.5	314
ø63	35	32	M10 x 1.5 depth 16	M8 x 1.25 depth 15	72	110	248	224	60	32	M18x1.5	314
ø80	40	37	M10 x 1.5 depth 22	M10 x 1.5 depth 15	89	124	267	240	66	40	M22x1.5	348
ø100	40	37	M12 x 1.5 depth 22	M10 x 1.5 depth 15	110	124	267	240	66	50	M22x1.5	348

Code / Bore size (mm)	MM	M	N	SB	(SD)	T	U	WF	X	XF	YA	YB	ZA	ZD	ZE
ø50	20	2	2	50	32	11	47.5	23	374	58	15	12	Rc1/4	ø12	ø6
ø63	20	2	2	50	38	11	54.5	23	374	58	15	12	Rc1/4	ø12	ø6
ø80	25	2	3	59	50	13	60	31	422	71	15	15	Rc3/8	ø12	ø6
ø100	25	2	3	59	60	13	70	31	422	71	15	15	Rc1/2	ø12	ø6

Mounting dimensions of each mounting are the same as BBS-A. Refer to pages 1261 to 1264.

Accessory dimensions

● Rod eye

Material : Cast iron
Painting

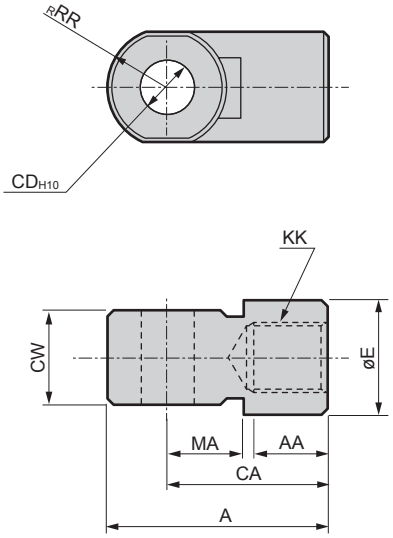

No.	Bore size (mm)	A	AA	CA	CD	CW	E	KK	MA	RR	Weight (g)
SCM-I-50	50, 63	56	18	40	14	22 $^{-0.3}_{-0.5}$	28	M18x1.5	20	16	158
SCM-I-80	80, 100	71	21	50	18	28 $^{-0.3}_{-0.5}$	38	M22x1.5	27	21	395

● Rod clevis

Material : Cast iron
Painting

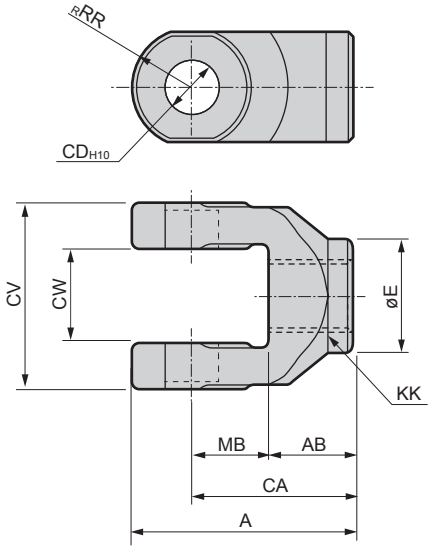

No.	Bore size (mm)	A	AB	CA	CD	CV	CW	E	KK	MB	RR	Pin No.	Weight (g)
SCM-Y-50	50, 63	56	20	40	14	44	22 $^{+0.5}_{+0.3}$	28	M18x1.5	20	16	SCM-P-50	258
SCM-Y-80	80, 100	71	23	50	18	56	28 $^{+0.5}_{+0.3}$	38	M22x1.5	27	21	SCM-P-80	590

Note : A pin and a snap ring are attached.

● Pin for clevis

Material : Steel
Zinc chromate plating treatment

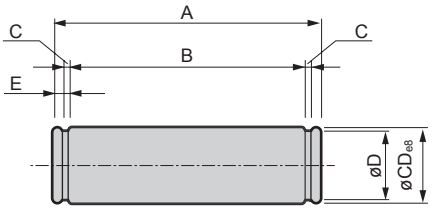

No.	Bore size (mm)	A	B	C	CD	D	E	Applicable snap ring	Weight (g)
SCM-P1-50	50	86	79.6	1.15	16	15.2	2.1	C type for shaft 16	133
SCM-P1-63	63	105.4	97.8	1.35	18	17	2.5	C type for shaft 18	207

*1 : For bore sizes ø80 and ø100, the dimension is the same as the pin for rod eye.

● Rod eye pin

Material : Steel
Zinc chromate plating treatment

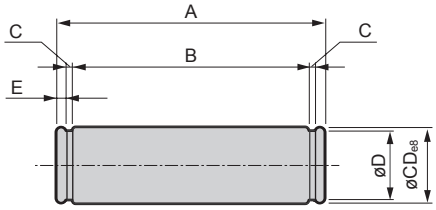

No.	Bore size (mm)	A	B	C	CD	D	E	Applicable snap ring	Weight (g)
SCM-P-50	50, 63	50.6	44.2	1.15	14	13.4	2.1	C type for shaft 14	60
SCM-P-80	80, 100	64	56.2	1.35	18	17	2.6	C type for shaft 18	126